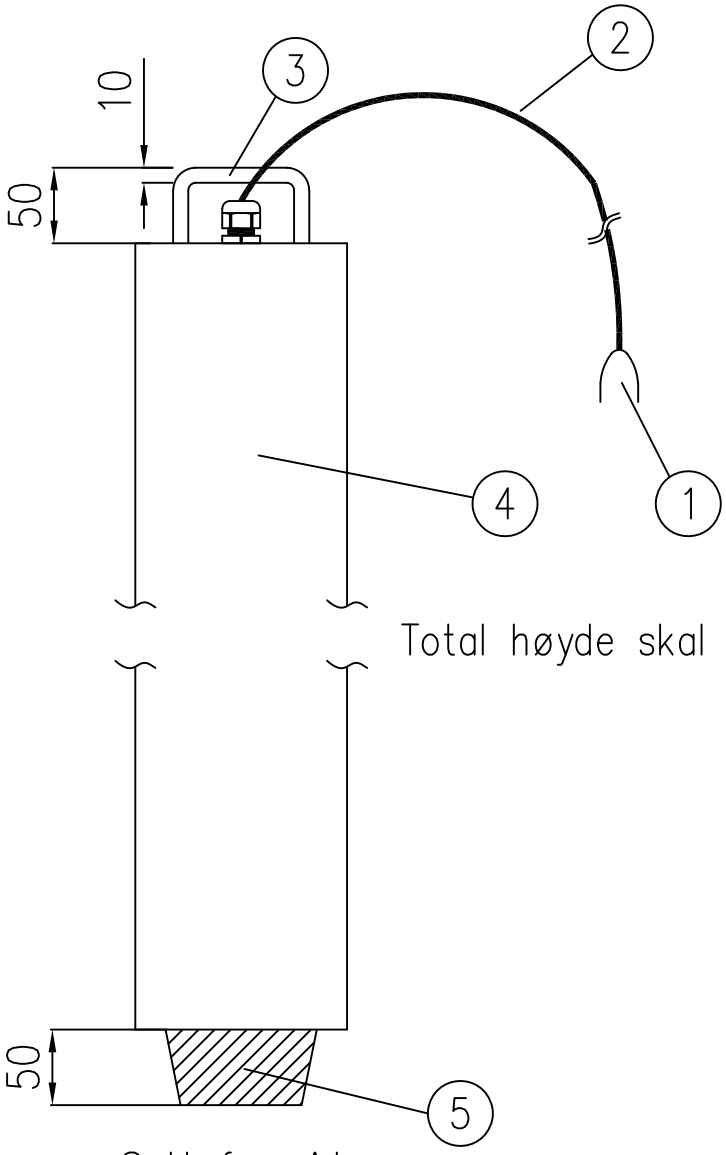

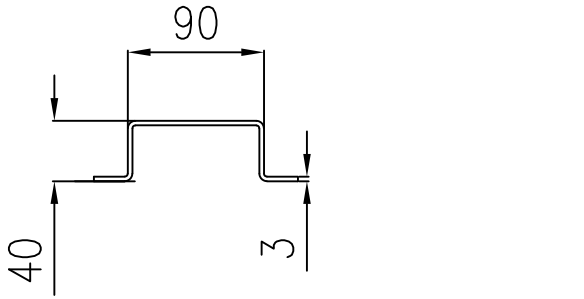

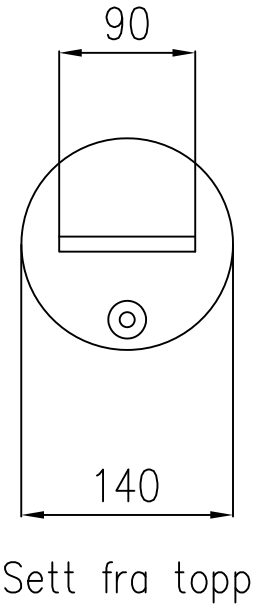

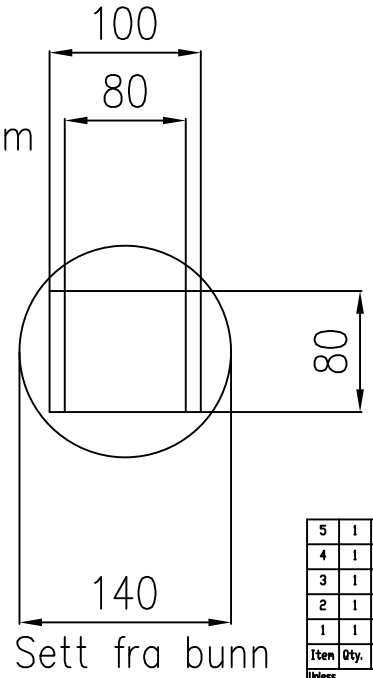

Item	Qty.	Description	Type code	Material	Weight
5	1	BUNNKLOSS			
4	1	ALKALISK BATTERI 200 Ah			
3	1	HANDTAK			
2	1	4 m NMH 500V (H05 RR-F) eller tilsvarende	2x1,5		
1	1	LEVERES UTEN KONTAKT	-	-	-

Unless otherwise specified	Dimension tol	Roughness µm	Fillet radius	Break sharp edges	Thread tolerance
	-	-	-	-	-

Stat / rel. level	Rev. no.	Date	Description	Part drawn by	Drawn by	Checked by	LTI appr.	Client appr.
A	0	25.10.24	UTGAVE FORESPØRSEL	DAN	DAN	SIH	RS	-

Title: BATTERI FOR LYSBØYER

KYSTVERKET

Projections	Kystverket DrwNo.	Scale	Drawing no.	Sheet
	BAAL02-AZ-001-A0	1 : 5	BAAL02-AZ-001	1 of 1
Total weight: 20 Kg	Principle for tolerancing: -	Size: A4		