Philips Azurion 7 C12

Interventional digital X-ray system

722078C

Site preparation specifications

Project reference	S722078 Azurion 7 C12 R1.x
Document date	21-2-2018

Philips contact

Telephone

e-mail

PHILIPS

Table of Contents

1 General ... 2
1.1 Purpose ... 2
1.2 Roles ... 2
1.3 Conditions of use ... 2
1.4 Responsibilities ... 2
1.5 Site readiness ... 3
1.6 Health & Safety ... 3
1.7 Equipment details ... 3

2 Building ... 6
2.1 General information ... 6
2.2 Floor requirements / Floor provisions ... 7
2.3 Ceiling requirements / Ceiling provisions ... 8
2.4 Wall requirements / Wall provisions ... 11

3 Electrical ... 12
3.1 General information ... 12
3.2 Power ... 12
3.3 Ducting specifications ... 15
3.4 Networking specifications ... 16

4 Mechanical ... 17
4.1 General information ... 17
4.2 Heating, Ventilation & Air Conditioning (HVAC) ... 17
4.3 Liquid cooling ... 17
4.4 Water ... 17
4.5 Sewerage ... 17
4.6 Sprinkler ... 17
4.7 Compressed air ... 17
4.8 Gases ... 18

5 Environmental protection ... 19
5.1 X-Ray ... 19

6 Drawings ... 20
6.1 Site specific drawings ... 20

7 Annex ... 21
7.1 Electrical diagram ... 21

1 General

1.1 Purpose

The Site preparation specifications should provide all required information to the customer and relevant contractors to enable the site to be prepared to the necessary quality and timescales ready for delivery and installation of the equipment.

1.2 Roles

Within this document the following groups are referred to:

- **Philips**: Equipment manufacturer, equipment supplier
- **Customer**: Purchaser, end user
- **Contractor / Third party**: member of the Architect, Engineers & Contractors (AEC) community, hired by either the customer or Philips

1.3 Conditions of use

The information within this document and any included drawings is provided solely for the purpose of providing the customer and/or their architects/building contractors, or the Philips appointed building contractor, with information concerning the Philips equipment locations and associated details, e.g. fixing positions, cable duct routes etc.

This document and any included drawings are not for architectural or building construction purposes other than stated above.

The enabling works detailed in this manual is solely for the installation of Philips supplied equipment, any additional requirements by the customer must be clearly identified and notified to Philips Healthcare and are the responsibility of the customer.

Philips assumes no liability nor offers any warranty for the fitness or adequacy of the premises or the utilities available at the premises in which the equipment is to be installed, used, or stored.

All work described must be carried out in compliance with specifications indicated in this package provided by Philips Healthcare; any deviation must first be agreed by Philips Healthcare project manager.

The specifications laid out in this document can be subject to change by Philips. All parties must ensure they are using the latest version.

1.4 Responsibilities

The customer is responsible for any classification of the room in relation to its intended use, and must notify Philips Healthcare project manager and the contractors of any additional specifications this may include.

The customer remains responsible for all works that are necessary for site preparation, unless works that are included in the Philips contract, in which case the term "customer" can be read as "Philips contractor".

The customer should ensure that the work areas are lockable with limited access. Philips Healthcare should have access to the areas (via keys / access codes) prior to the start and during the installation.

The customer shall advise Philips of conditions at or near the site which could adversely affect the carrying out of the installation work and shall ensure that such conditions are corrected and that the site is fully prepared and available to Philips before the installation work is due to begin.

The contractor and or architect must ensure that the works carried out in line with this document comply with local regulations unless more strict requirements are set out by this document or defined by the customer.

1.5 Site readiness

We expect the site of the installation to be completely finished, clean, dry, and clear of contractors and meet the requirements defined in this document before the equipment delivery / start of the installation.

Failure to meet these requirements could result in delays to the timelines, additional charges etc.

1.6 Health & Safety

1.6.1 Radiation considerations for ionizing radiation (X-ray, gamma ray)

The equipment specified in this document uses ionizing radiation (e.g. X-ray, gamma ray) for diagnostic imaging, therefore safety measures have to be applied to avoid hazards to patients, visitors and staff. It is the customer's responsibility to comply with local regulation and to ensure:

- The size, position, angle of vision and radiation protection capabilities of protective shielding & the effectiveness of other radiation protection, radiation warning devices, and further equipment is approved by the local radiation protection authority.
- The required radiation protection is in place at the start of the installation as test images have to be made during the installation.
- That there is sufficient protection from any other existing external sources of ionizing radiation for the Philips employees and representatives during the installation process.
- When drilling holes in protective screen, walls, floor and ceiling it must be ensured that the radiation integrity of the room is maintained.

Equipment data to support the protection calculations by the local radiation protection authority are listed in section *Environmental protection* of this document.

Note!

Equivalents for lead (1 mm Pb)

There are other materials which can be used for protection as an alternative to lead (however this must be specified by the local radiation protection authority)

- 8 cm concrete: 2.2 g/cm3
- 11 cm brick: 1.6 g/cm3

1.7 Equipment details

1.7.1 Equipment specification

The table lists the basic specifications for the ordered equipment.

Equipment	Dimensions (W×D×H) [mm]	Mass [kg]
Ceiling stand (Poly G2 FD12)	3374x2174x2790 (full movement range excl. rails)	1085
Examination light	-	14
Radiation Shield on ceiling	-	30
Radiation Shield on table	-	30
Workstation in control room	several parts	52
Monitor ceiling suspension (FlexVision 58")	Ceiling carriage: 3800x320x250 Monitor frame: 1531x1020	250 (max)
AD7 Patient Table - pivot	3190x608x1072	490
Interventional hardware - Interventional tools	Several parts Largest: 479x425x189	33
Injector pedestal (Medrad Mark 7 Arterion)	518x518x1051	91
Main cabinet (M-cabinet) with CRC extension	550x780x1955	375
Cable management cabinet	300x253x1775	-
Peripheral cabinet (R-cabinet) with CRC	550x680x1955	200
Certeray cabinet (E-cabinet) with CRC	550x680x1955	145
Imaging cabinet (B) with CRC	550x680x1955	200

Equipment noise levels

Equipment	Noise level [dB(A)]	
	(operational)	(standby)
Examination room	max. 60	40 - 45
Control room	max. 60	< 50
Technical room	max. 68	< 60

1.7.2 Delivery details

The delivery routes will be checked in advance by the Philips Healthcare project manager.

The table lists the critical requirements for delivery. In case of any potential problems with these requirements please contact Philips Healthcare project manager.

Requirement	Specification
Site accesibility	Two Pallet trucks, torque wrench 100Nm, hoist tool, ladder, Spirit Level, Standard Toolkit (TC129)
Minimum door height	≥ 2020 mm (excl. protective floor covering)
Minimum door width	≥ 975 mm
Minimum corridor width (including 100mm margin for wall mounted obstacles)	≥ 1075 mm
Corridor widths (X&Y) at a 90° bend (see illustration)	Y ≥ 2147 mm when X = 1075 mm
	assembled:
	when X= minimum door width (Y can be smaller when X is wider)
Longest package	3900 mm
Minimum elevator cage size (WxDxH)	974x2362x2020 mm
	assembled:
	(longest packages via an alternate route)
Elevator & floor loading	The equipment delivery route must be suitable to take the load and delivery of the packages and the transport tools (e.g. pallet truck, dolly, etc.)
Heaviest package (excl. transport tools)	950 kg

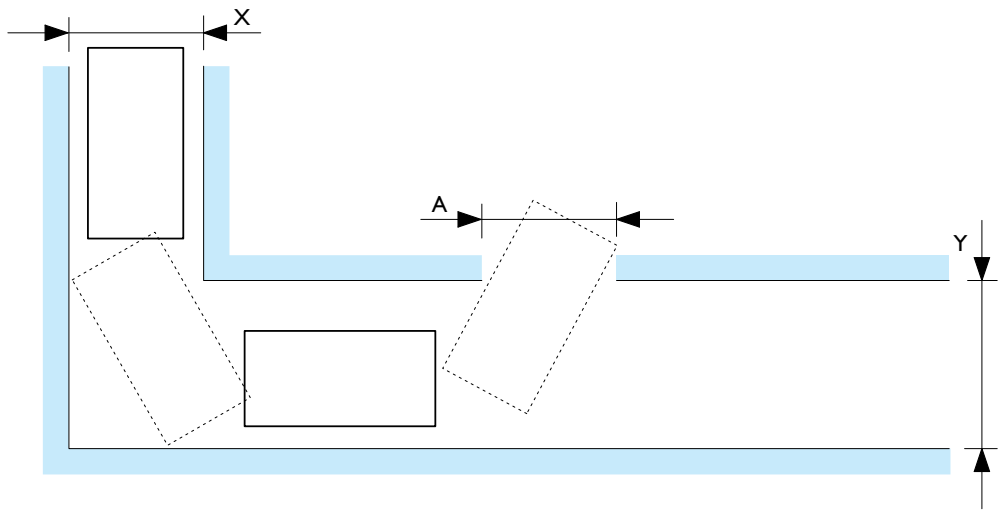

ICN-V-1403-000-GG-01-01-A

Transport route / Corridor widths (X & Y) and door opening (A)

1.7.3 Storage conditions

If storage of the equipment at the customer site is required and agreed with the Philips Healthcare project manager, the following critical requirements must be maintained. In case of any potential problems with these requirements please contact the Philips Healthcare project manager.

It is recommended to store the magnet with the cold head functional.

Requirement	Specification
Temperature	-25 to +70 °C
Relative humidity	5 - 95% (non-condensing)
Vibration	10 - 150 Hz

2 Building

2.1 General information

Please ensure that you read all sections of this document and take care to work with the other contractors on any overlapping activity.

All work described must be carried out in compliance with specifications indicated in this package provided by Philips Healthcare. Any deviations must first be agreed by Philips Healthcare project manager.

All work described in this section is to be executed and supplied by the relevant contractor / party, unless otherwise indicated as Philips Healthcare, or defined in a subsequent document.

Philips provides specifications within this document relative to equipment anchorage and floor/walls/ceiling loading (as applicable). The customer shall be solely responsible for the structural integrity/adequacy of the floor, walls and ceiling upon which the equipment will be placed. In addition the customer shall be responsible to ensure any anchorage methods and designs are suitable. Any tests required shall be the customer's responsibility.

The area must be prepared to accept cable ducting as required (Feed-through & troughs).

When drilling holes and Feed-throughs in the walls, floor and ceiling it must be ensured that the structural integrity of the room is maintained.

The contractor must ensure that fixing holes, especially tapped holes, are kept clear of any paint / levelling compound etc.

The contractor must ensure that the reference axes, as shown on the drawings, are precisely aligned, and marked on the floor (and ceiling when ceiling provisions are applicable).

2.2 Floor requirements / Floor provisions

Floor levelness and waviness

Floor levelness and waviness are critical for the correct operation of the system and will be checked in advance of the installation.

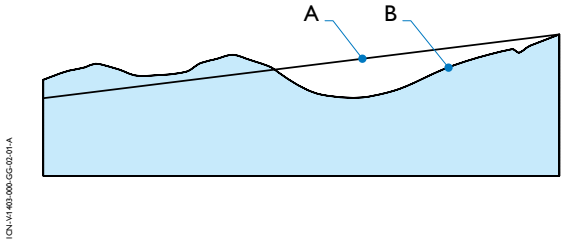

Floor levelness (A) and waviness (B)

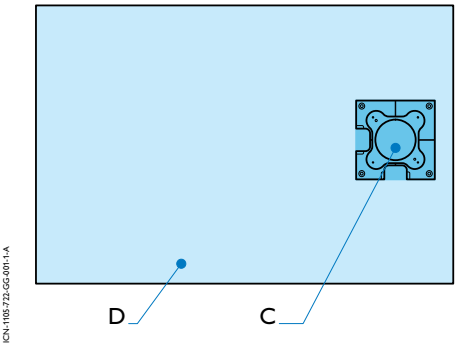

Levelness area

Requirement	Specification
Equipment floor levelness (A)	1 mm/m (measured between any point of the floor area of the equipment) (C)
Room floor levelness (D)	2 mm/m (recommended)
Floor waviness (B)	Within the tolerances of the floor levelness (A) & (C, D)

Refer to the *Floor provision details* in the section *Drawings* for more information.

The contractor must ensure that the floor mounting / placement areas defined meet the specifications to receive the holes, fixings and take the load.

The mounting points on the floor must be suitable for the tensile strengths and sheer forces as indicated in the table below.

There shall be no obstructions on the floor (sliding door tracks, etc.) in front of the Philips technical cabinets. The floor must be clear to allow cabinets to be pulled away from the wall for service.

The customer must ensure that the chosen floor covering is fit for purpose and meets the requirements of any room classifications that may apply.

The contractor must ensure that, if present, any floor ducting should be sealed after the completed installation to prevent the ingress of fluids.

2.2.1 Floor requirements table

Overview of floor mounted equipment and fixation specifications

Refer to the chapter *Drawings*, sheet *Floor provisions* for location, quantities and responsibilities

Equipment	Weight [kg]	Fixings	Forces [N]
Main cabinet (M-cabinet) with CRC extension	375	-	-
Cable management Cabinet	-	-	-
Peripheral cabinet (R-cabinet) with CRC	200	-	-
Certeray Cabinet (E-cabinet) with CRC	145	-	-
Imaging cabinet (B-cabinet) with CRC	200	-	-
Workstation in Control Room	52	-	-
AD7 Patient Table (pivot)	450	4x M16	8125 (pull force)

2.2.2 Floor requirements illustrations

Refer to the chapter *Drawings*, sheet *Floor provisions* for the site specific drawings.

2.3 Ceiling requirements / Ceiling provisions

The contractor must ensure that support structure mounting areas defined meet the specifications to receive the holes, fixings, and take the load.

The support structure surface upon which Philips equipment is to be placed / anchored must meet the following specifications:

Requirement	Specification
Required ceiling height	2900 mm (+10 / -0 mm)
Flat and level	2 mm/m
Square and parallel (horizontal and vertical)	In each direction
Static deflection	max. 1.7 mm (with approx.1000 kg stand)
Max. retardation forces	11742 (stand) 4870 (MCS)
Horizontal stiffness	min. 6,000,000 N/m, preferred 10,000,000 N/m
Vertical stiffness	min. 6,000,000 N/m, preferred 10,000,000 N/m
Rotational stiffness	min. 20,000,000 Nm/rad

Ceiling clearance

Lighting fixtures must be placed in such a position that they are not obscured by equipment or its movement, or interfere with the movement of Philips equipment (e.g. monitor suspensions) or otherwise adversely affect the equipment.

2.3.1 Ceiling requirements table

Overview of ceiling mounted equipment and fixation specifications

Refer to the chapter *Drawings*, sheet *Ceiling provisions* for location, quantities and responsibilities.

Equipment	Weight [kg]	Fixings	Forces [N]
Examination light (on ceiling)	14	-	-
Radiation shield (on ceiling)	30	-	-
Ceiling stand (PolyDiagnost G2 FD12)	1085	28x M10x40	11742 (stand)
Monitor ceiling suspension Flexvision 58" (slim line MCS)	250 (max)	16x M10x40	4870 (Max. ceiling load required abusive)

2.3.2 Ceiling requirements illustrations

Refer to the chapter *Drawings*, sheet *Ceiling provisions* for the site specific drawings.

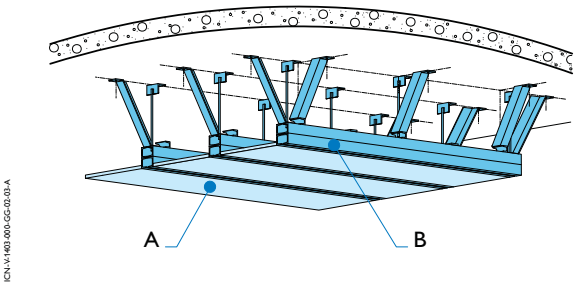

Typical example of a false ceiling (A) with ceiling support structure (B)

Description of the support structure

The Philips ceiling rails should be mounted on anchor rails (metal framing). The anchor rails are the interface for installing the ceiling rails. The following anchor rail system(s) are allowed:

- Unistrut, type P1001
- MSR-Profile (similar Wieland-anchor rails)
- Graaf-Profile (similar Wieland-anchor rails)

A complete set of fixing material to mount the Philips equipment to the anchor rails (including isolation / installation / insulation plates and shims) is part of the delivery. Further details can be seen in the drawings. If Beam Clamps are used to fix Unistruts/Marstrut to steelwork, a suitable shakeproof type must be used.

The load bearing struts are indicated in the drawings. When applicable extra struts/profiles are indicated to serve as frame work for suspended ceiling tiles.

The contractor must take measures (like tagging) to prevent drilling and/or screwing in the lower metal framing channels.

Overview of bolt push and pull forces

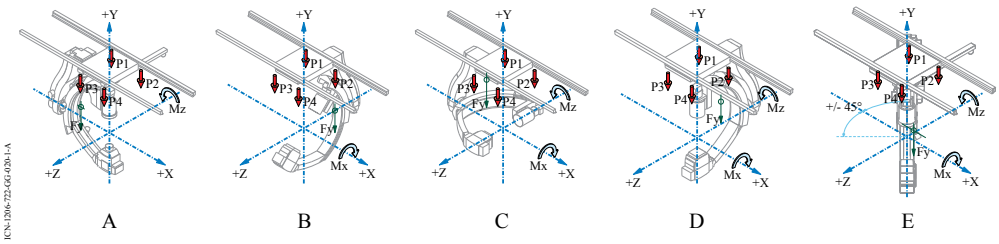

Static forces

Identification	A	B	C	D	E	
Position L-arm	0°	90°	0°	90°	+45°	-45
F_y	10850 N	10850 N	10850 N	10850 N	10850 N	
F_x	n/a	n/a	n/a	n/a	n/a	
$\|M_x\|$	n/a	5483 Nm	805 Nm	5815 Nm	4112 N	
$\|M_z\|$	5815 Nm	n/a	5750 Nm	n/a	4112 N	
P1	+6528 N	+5709 N	+6925 N	+5891 N	+7658 N	+3162 N
P2	-1103 N	+5709 N	-620 N	+5891 N	+2262 N	-2233 N
P3	+6528 N	-285 N	+6045 N	-466 N	+3162 N	+7658 N
P4	-1103 N	-285 N	-1500 N	-466 N	-2233 N	+2262 N

Static data

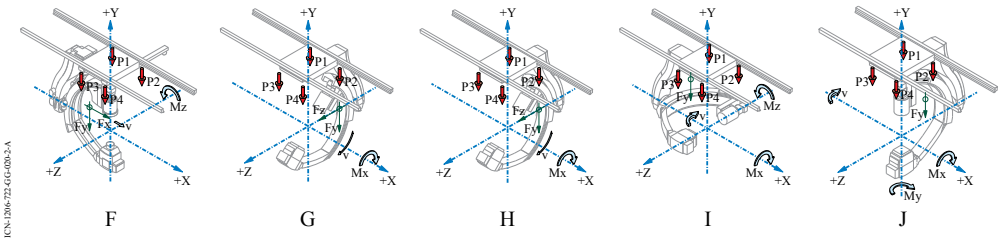

Dynamic forces

Identification	F		G	H	I	J	
	Collision longitudinal movement		Deceleration C-arc rotation		Deceleration junction rotation	L-arm rotation	
			Brakes	Stops			
v	0.15 m/s (endstop)	0.5 m/s (abusive)	18°/s	18°/s	25°/s (motorbrake)	12°/s (endstop)	19°/s (endstop)
F_y	10850 N	10850 N	11097 N	11478 N	11084 N	10850 N	10850 N
F_x	4117 N	8235 N	247 N	628 N	n/a	n/a	n/a
$\|M_x\|$	n/a	n/a	6750 Nm	8705 Nm	1305 Nm	5815 Nm	5815 Nm
$\|M_y\|$	n/a	n/a	n/a	n/a	n/a	815 Nm	1300 Nm
$\|M_z\|$	9788 Nm	13762 Nm	n/a	n/a	5860 Nm	n/a	n/a
P1	+9135 N	+11742 N	+6464 N	+7628 N	+7329 N	+5891 N	+5891 N
P2	-3710 N	-6317 N	-6464 N	+7628 N	-360 N	+5891 N	+5891 N
P3	+9135 N	+11742 N	+915 N	-1890 N	+5902 N	-466 N	-466 N
P4	-3710 N	-6317 N	-915 N	-1890 N	-1787 N	-466 N	-466 N

Dynamic data

2.4 Wall requirements / Wall provisions

The contractor must ensure the walls are flat and perpendicular to the floor.

The contractor must ensure that wall mounting areas defined meet the specifications to receive the holes, fixings, and take the load.

2.4.1 Wall requirements table

Overview of wall mounted equipment and fixation specifications

Refer to the chapter *Drawings*, sheet *Wall provisions* for location, quantities and responsibilities.

Equipment	Weight [kg]	Fixings	Forces [N]
Main cabinet (M-cabinet) with CRC extension	375	CRC: 4x screw, spring ring, washer	-
Cable management cabinet	-	CMC: 4x screw, spring ring, washer	-
Peripheral cabinet (R-cabinet) with CRC	200	CRC: 4x screw, spring ring, washer	-
Certeray Cabinet (E-cabinet) with CRC	145	CRC: 4x screw, spring ring, washer	-
Imaging cabinet (B-cabinet) with CRC	200	CRC: 4x screw, spring ring, washer	-

2.4.2 Wall requirements illustrations

Refer to the chapter *Drawings*, sheet *Wall provisions* for the site specific drawings.

3 Electrical

3.1 General information

Please ensure that you read the other sections of this document and take care to work with the other contractors on any overlapping activity.

All work described must be carried out in compliance with specifications indicated in this package provided by Philips Healthcare; any deviations must first be agreed by Philips Healthcare project manager.

All work described in this section is to be executed and supplied by the relevant contractor / party, unless otherwise indicated as Philips Healthcare, or defined in a subsequent document.

The contractor must ensure that live power is provided as specified to the areas defined and is switchable and tested prior to the start of the installation.

The customer must ensure that the mains supply isolator for the equipment in the room must be conveniently accessible to the contractor.

The cable ducting shown in the drawings should not be used for any cables other than those for the Philips Healthcare equipment.

The contractor must ensure that at least 1200 mm free cable length is left on each unconnected end for all contractor-supplied cabling unless otherwise stated

For specific wiring specifications & instructions (contractor) please refer to the drawings.

Important!

Third party equipment

Any equipment not supplied by Philips Healthcare must be compliant with IEC60601-1.

3.2 Power

3.2.1 Power specifications

The power specifications are determined by the Main cabinet only. The M-cabinet supplies the power to the X-ray generator by internal cabling.

3.2.2 Power quality

The power supply to the system must meet the following voltage and frequency requirements.

Requirement	Specification
Voltage	3x 400 - 480V ±10%
Frequency	50 - 60 Hz

3.2.3 Power consumption

Requirement	Specification
Fuse protection [I_{fuse}]	63 - 125 A (slowblow / gG curve)
Mains switch	125 A
Input rating	'76 A at 400 V; 73 A at 415 V; 69 A at 440 V; 66 A at 460 V; 63 A at 480 V (50/60 Hz)
Peak currents	330 A (8.33 ms)
Maximum power	100 kVA
Mains resistance	max 140 mΩ for 400 V; max 215 mΩ for 415 V; max 325 mΩ for 440 V; max 400 mΩ for 460 V ;max 465 mΩ for 480 V
Wiring requirement	min 13.3 mm2 max 21.2 mm2

3.2.4 Circuit breaker

An earth-leakage circuit breaker is to be provided between the mains fuse and and the medical equipment depending on local regulations.

The earth-leakage circuit breaker meets the following specification:

Requirement	Specification
Rated fault current	0.03 A
Rated current	63 - 125 A
Connection terminals	min 13.3 mm2 max 21.2 mm2

3.2.5 Earthing

Note!
The earth connection requirements for medical equipment exceed those for ordinary electrical installations. The contractor must ensure that local regulations are followed closely.

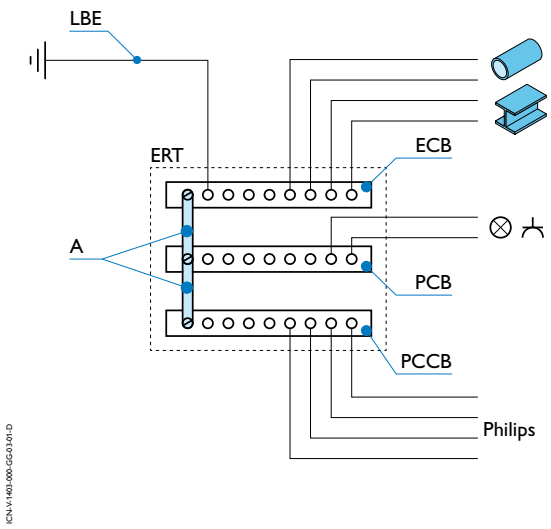

Typical layout of an Earth Reference Terminal

In all situations, the contractor must ensure that there is one (1!) bonding bar for **supplematary equipotentional bonding** (ECB; Equipotentional Conductor Bar), a bonding bar for **lighting and power outlets** (PCB; Protective Conductor Bar) and a bonding bar for **permanently installed medical devices** (PPCB, Philips Protective Conductor Bar). The bonding bars are connected via removable links (A) with a very low impedance. The customer earth (LBE; Local Building Earth) is connected to the ECB.

3.2.6 Lighting & Small Power

The contractor must ensure that sockets for the Philips equipment only are provided as per the drawings.

Requirement	Specification
Light source (operation)	50 - 100 lux (adjustable); measured on the floor
Light source (service)	500 - 1000 lux ; measured on the floor

Wall Connection Box Transmitter (WCBT)

The WCBT is used as galvanic isolation of DVI, USB and Ethernet signals from external PC's or equipment to the system. The galvanic isolation ensures electrical safety independent of the power and ground source of the external equipment. The WCBT is powered directly via hospital mains.

3.2.7 Safety mechanism requirements

The Philips system is equiped with several additional safety provisions. The use of these provisions is regulated by local legislation. Philips Healthcare advises to install the safety provisions at all times to reach maximum safety for personnel and patient.

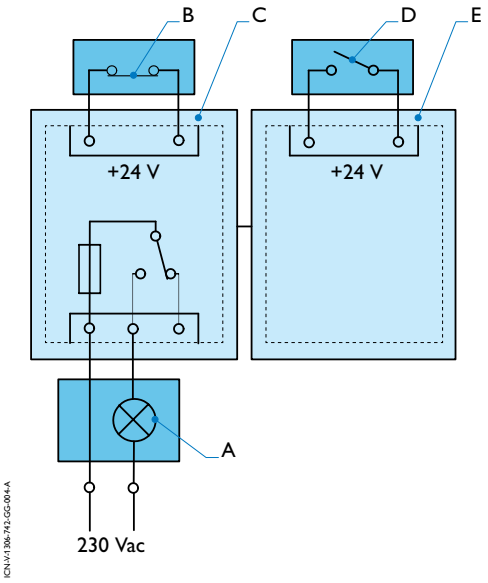

Typical diagram for safety mechanism requirements

X-ray ON warning lights

For the X-ray on warning light(s) (A), the system is provided with a relay contact in the Main cabinet which can switch a maximal 6 A and can be connected to maximum 230 V as shown in the illustration above. The contractor must ensure that the lamp provided has a response time between 1 - 1000 msec.

The contractor must ensure that the X-ray on warning lights are mounted as per the drawings and cables are routed to the Main cabinet. It is allowed to use Philips dedicated cable ducting for this purpose.

The Philips engineer will connect the cables to the Main cabinet (C).

Interlock door contacts

The contractor must ensure that the interlock door contacts (D) are mounted as per the drawings and cables are routed to the Auxiliary connection box. It is allowed to use Philips dedicated cable ducting for this purpose.

The Philips engineer will connect the cables to the Auxiliary connection box (E).

Room emergency off switch

The contractor must ensure that the emergency off switch (B) is mounted as per the drawings and cables are routed to the Main cabinet. It is allowed to use Philips dedicated cable ducting for this purpose.

The Philips engineer will connect the cables to the Main cabinet (C).

3.3 Ducting specifications

The contractor must ensure that:

- Cable ducts and trays are routed as per the drawings.
- Upon completion of the Philips installation, all floor trunking must be suitably sealed to prevent ingress fluids.
- All cable outlets are to be fitted with grommet strips to protect against chafing.
- Cable ducts must be reserved for Philips equipment only.
- All metal cable ducts are bonded and earthed according to local regulations.

The contractor must verify the feasibility of the cable routing as shown in the drawings, any changes should be agreed with the Philips Healthcare project manager.

Chosen materials and methods must comply with local regulations and craftsmanship and prevent cable bending radii smaller than 100 mm (unless specified otherwise).

The contractor must ensure that it is possible to access the trunking at any time during the life of the equipment.

Where wiring is indicated point to point on the wiring diagram, it must be run in suitable trunking, cable tray or conduit.

Cable lengths

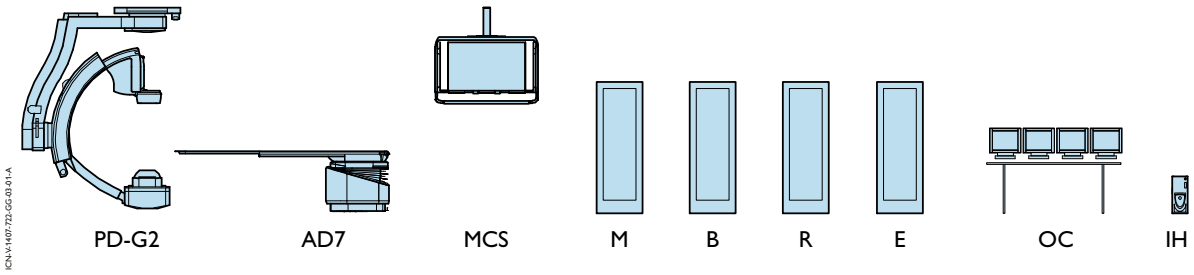

Cable no.	Connection				Cable length [m]
	From		To		
1.	M	Main cabinet	PD-G2	Ceiling stand Poly G2	12.2
	-	Generator cabinet			
2.	M	Main cabinet	MCS	Monitor FlexVision	18.5
	R	Peripheral cabinet			
	B	Imaging cabinet			
3.	M	Main cabinet	AD7	Patient table	13.5
	R	Peripheral cabinet			
4.	M	Main cabinet	-	Control room connection box	18.5
	R	Peripheral cabinet			
5.	MCS	Monitor FlexVision	OC	Control room monitors	20
6.	M	Main cabinet	R	Peripheral cabinet	5
			B	Imaging cabinet	
7.	B	Imaging cabinet	R	Peripheral cabinet	8
8.	E	Generator cabinet	M	Main cabinet	8
9.	-	Interventional hardware	R	Peripheral cabinet	25
			B	Imaging cabinet	

3.4 Networking specifications

3.4.1 Local Area Network (LAN)

The contractor must ensure that the network connection points are supplied, fitted and connected as per the drawings.

The contractor must work with the customer to ensure that a connection to the hospital network is available, prior to the start of installation, at the network connection points as shown in the drawings.

The customer must allocate an IP address and other network specific information requested by Philips, for each network connection shown in the drawings.

Further information and guidance on LAN setup and requirements will be provided by the Philips Healthcare project manager.

3.4.2 Remote Service Network (RSN)

Remote Service Network (RSN) is a service provided by Philips Healthcare to enable remote network connections between Philips medical devices and the Philips Remote Service Center. RSN can be used for remote technical support, diagnostics and application assitance. The facility uses secure Virtual Private Networks (VPN) to communicate over the internet to the hospital.

The system needs one or more Ethernet RJ-45 wall sockets with connection to the hospital network as per the drawings. This connection needs to be setup according to the following specifications.

Important!

RSN Details

Please provide the Philips project manager in advance with the details.

- Full duplex network connection, 10BASE-T, 100BASE-T or 1000BASE-T
- Local **fixed** IP address
- Corresponding subnet mask
- Corresponding gateway
- Minimum required speed: 128 kbit/s

4 Mechanical

4.1 General information

Please ensure that you read the other sections of this manual and take care to work with the other contractors on any overlapping activity.

All work described must be carried out in compliance with specifications indicated in this package provided by Philips Healthcare; any deviations must first be agreed by Philips Healthcare project manager.

All work described in this section is to be executed and supplied by the relevant contractor / party, unless otherwise indicated as Philips Healthcare, or defined in a subsequent document

4.2 Heating, Ventilation & Air Conditioning (HVAC)

The Philips equipment requires the following temperature and humidity conditions:

Requirement	Specification
General requirements	
Temperature	+18 to +28 °C
Maximum temperature change	0,5 °C/minute.
Relative humidity	20 - 80%, non-condensing (non-condensing)
Examination room	
Heat emission	Average 1900 W
Control room	
Heat emission	Average 500 W
Technical room	
Heat emission	Average 2400 W

4.3 Liquid cooling

The Philips equipment has no requirements in this discipline.

4.4 Water

The Philips equipment has no requirements in this discipline.

4.5 Sewerage

The Philips equipment has no requirements in this discipline.

4.6 Sprinkler

The Philips equipment has no requirements in this discipline.

4.7 Compressed air

The Philips equipment has no requirements in this discipline.

4.8 Gases

The Philips equipment has no requirements in this discipline.

5 Environmental protection

5.1 X-Ray

5.1.1 X-Ray energy

The local radiation protection authority can use the following data to determine the correct protection requirements.

Parameter	Specification
Tube current	10 - 1000 mA
Tube voltage	40 - 125 kV
mAs product	0.1 - 2000 mAs
Exposure time	1.0 ms - 16 s
Exposure frequency	0.5 exp./s - 60 exp./s

6 Drawings

6.1 Site specific drawings

The technical drawings created for this project are added behind this page as a set.

The set normally contains the following drawings *(can vary depending on building works and system configuration)*:

- Site layout
- Building modifications
- Schematic cross section(s)
- Floor provisions
- Ceiling provisions
- Wall provisions
- Details

Refer to the table of contents on the cover page of the drawing set for the actual contents.

Important!

Not for construction!

The provided drawings are the graphical part of the site preparation specifications and not intended for direct application as construction drawings. It is the responsibility of the customer or contractor to check the local feasibility of the provided specifications and solutions before embedding them into the actual construction drawings.

If the customer or contractor decides to use the Philips drawings unchanged, mark each printed or digital copy of each drawing sheet clearly with the following statement:

"Approved for construction by <name of authorized engineer> on behalf of <contractor>"

completed with the date and signature of the authorized engineer.

7 Annex

7.1 Electrical diagram

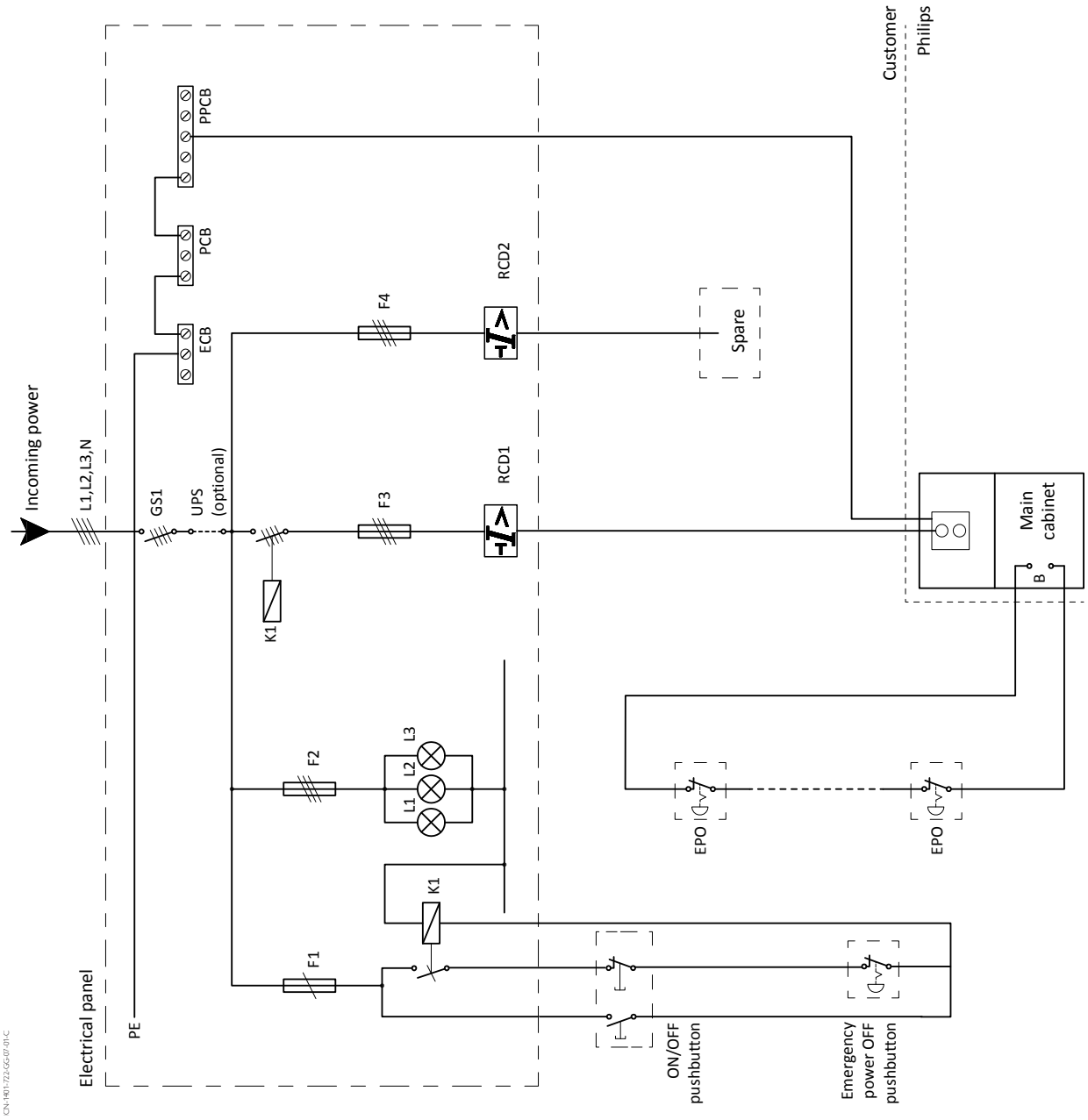

Requirement		Specification	
Voltage		3x 400 - 480V ±10%	
Frequency		50 - 60 Hz	
Mains switch (GS1)		125 A	
Fuse protection			
F1	F2	F3	F4
6 A	2 A	63 - 125 A (slowblow / gG curve)	16 A
Residual current device			
RCD1		RCD2	
63 - 125 A / 0.03 A		16 / 0.03 A	

Colophon

Philips Healthcare
A business of Royal Philips N.V.
www.philips.com/healthcare
healthcare@philips.com

Your project is executed by
Philips Medical Systems Nederland B.V.
Veenpluis 4-6
5684 PC, Best, The Netherlands

www.healthcare.philips.com/main/support/support-for-your-site/site-planning/index.wpd

© 2018 Koninklijke Philips N.V.
All rights are reserved

This document was assembled specifically for the project mentioned on the front page and contains configuration and site specific information. Do not use for any other purpose.

Published by Philips Healthcare – Commercial Operations