With Azurion

performance and superior care become one

Specifications Azurion 7 C12 and Azurion 7 F12

The print quality of this copy is not an accurate representation of the original.

Contents

1	Geometry	4
2	User interface	10
3	X-ray generation	16
4	Imaging	18
5	Viewing	21
6	Additional options	24
7	Room layout	25

The print quality of this copy is not an accurate representation of the original.

1 Geometry

1.1 Gantry / stand

The G-shaped stand maximizes speed and provides excellent patient access. The rock stable stand design offers fast and easy tableside operation. The stand, monitor suspension, and operating modules can be freely positioned for full applicational flexibility.
The unique G-shaped of the stand allows you to reach the groin without repositioning and allows a wide range of projections.

The exclusive BodyGuard patient protection mechanism is designed to protect the patient from unexpected contact between the detector and the body. It uses capacitive sensing to prevent collision, while allowing stand positioning at up to 25°/s.

The print quality of this copy is not an accurate representation of the original.

Azurion 7 C12

Azurion 7 F12

Technical specifications

Iso-center to floor	Ceiling and floor is 106.5 cm (41.9 inch)
Longitudinal movement	Ceiling is manual and motorized of 300 cm (118.1 inch) at 15 cm/sec. It includes auto stops at the park position, cardio position, neuro position and lower peripheral position. Floor has no longitudinal movement
L-arm rotation	Ceiling has motorized and manual movement, over 180° with snap positions at 90°, -0°, -90° to allow patient access from three sides of the table
C-arm rotation / speed	Ceiling and floor in head-end position: 120° LAO, 120° RAO up to 25°/s Ceiling in side position: 45° LAO, 45° RAO up to 18°/s
C-arm angulation / speed	Ceiling and floor in head-end position: 45° cranial, 45° caudal up to 18°/s Ceiling in side position: 120° cranial, 120° caudal up to 25°/s
Focal spot to iso-center	76.5 cm (30.1 inch)
Source Image Distance	89-123.5 cm (35-48.6 inch)
C-arm depth	105 cm (41.3 inch)
In case of rotational angio:	G-stand in head position Maximum rotation speed 55°/sec. Maximum rotation angle 240° Frame speeds 15 to 30 and 60 fps.

Optional

Automatic Position Controller (APC)	Functionality for the stand is accessed through the touch screen module at the patient tableside. • This option includes a programmable position extension, which allows an 'unlimited' number of positions that can be stored and recalled per clinical procedure. • Another feature of the APC is reference-driven positioning. This allows you to recall stand positions by referring to the images at the reference monitors, which means that the rotation, angulation, SID, and detector orientation are restored to the original settings of the reference image.

[1] Only in case of a Ceiling Mounted System

The print quality of this copy is not an accurate representation of the original.

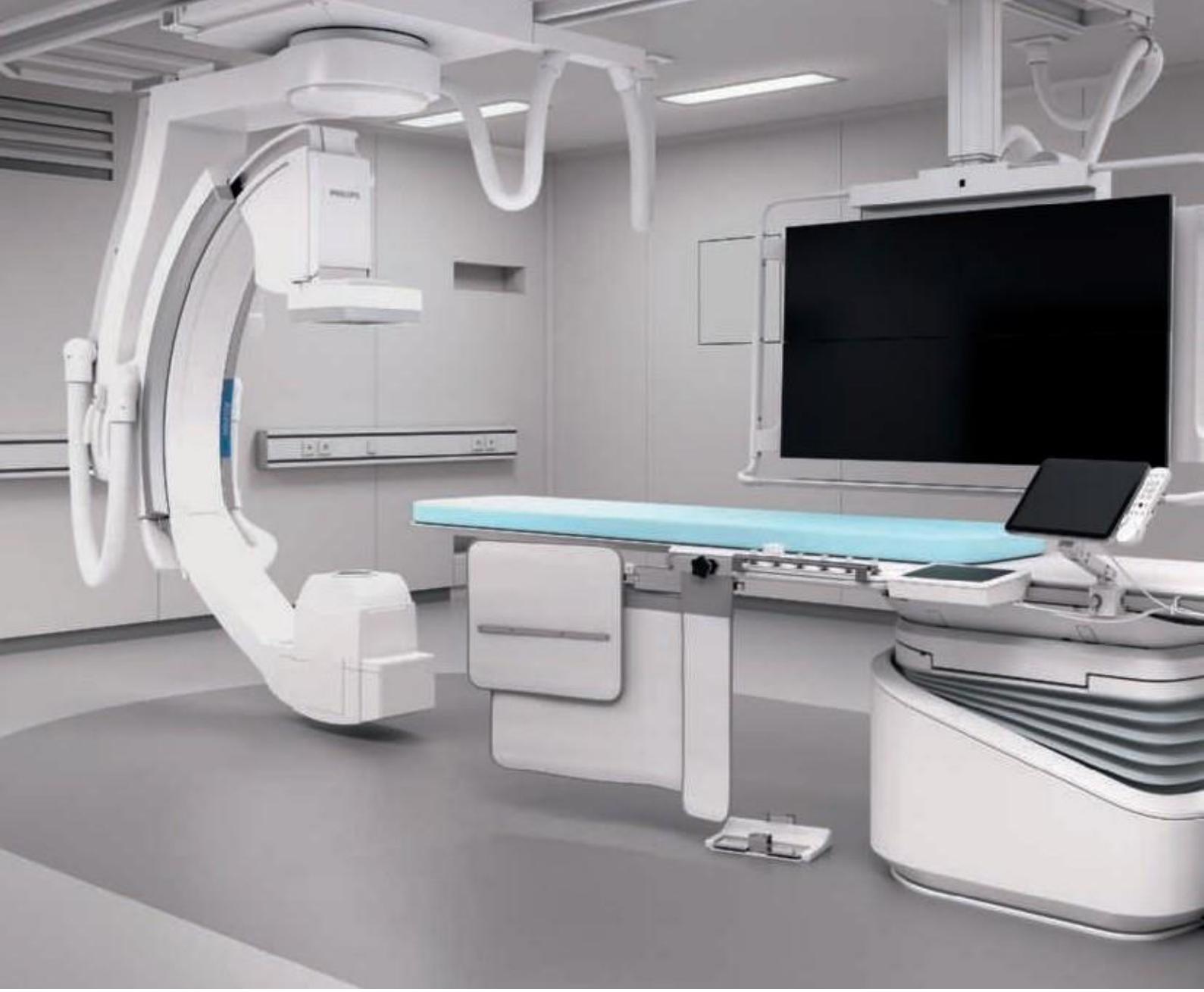

1.2 Patient table

The patient table is a dedicated interventional X-ray table that supports a full range of applications. A feather-light free floating tabletop helps maintain your region of interest and reduce effort. It has very high patient loadability and CPR can be performed on the table.

Table	
Table height (min.-max.)	74 cm - 102 cm (29.1 inch - 40.2 inch)
Table top length	319 cm (125.6 inch)
Table top width	50 cm (19.7 inch)
Longitudinal float range	120 cm (47.2 inch)
Lateral float range	36 cm (14.2 inch)
Max. table load	325 kg (715 lbs)
Max. patient weight	250 kg (551lbs) + 500 N additional force max. tabletop extension in case of CPR
Table up/down speed	30mm/s

The print quality of this copy is not an accurate representation of the original.

Patient table options

Store and recall	Reproducing precise coordinates (height, longitude and latitude) is critical for obtaining accurate visualizations. The optional automatic position controller brings the table back to the original table position stored, without applying additional X-ray dose.
Pivot	Transradial access, upper extremity angiography, and patient transfer have never been simpler with our optional pivot feature. One finger push-to-pivot allows effortless patient positioning. It moves with less friction, making it easier to move larger patients. A secure mechanism locks the tabletop in place to prevent it from moving.
Tilt	Our option tilt functionality allows you to tilt the table for gravity oriented or puncture procedures. As the table tilts, the X-ray beam automatically adapts to the movement to keep the region of interest in the isocenter of rotation and angulation of the stand. As a result, your region of interest always remains centered.
Tilt and cradle	Many electrophysiology and non-vascular procedures benefit from additional positioning options. Our patient table with isocentric tilt and cradle-tilt functionality puts your gravity oriented or guided puncture procedures at the required angle.

Technical specifications options

Pivot	-90°/+180° or -180°/90°
Tilt and cradle	Tilting range: ±17° iso-centric, Cradle tilting range: ±15°, Height: min +4 cm (1.6 inch), max +1 cm (0.4 inch)
Tilt	Tilting range: ±17° iso-centric, Table height: min. +4 cm (1.6 inch), max. + 1 cm (0.4 inch)

The print quality of this copy is not an accurate representation of the original.

The print quality of this copy is not an accurate representation of the original.

Azurion 4F Monitor Ceiling Suspension

Table X-ray protection

Ceiling suspended radiation shield

1.3 Philips monitor ceiling suspension

The Philips monitor ceiling suspension allows flexible, freely rotating positioning with a concave set-up of the monitors for an excellent viewing angle. A separate integration kit is available for third party monitor suspensions and ceiling booms. Standard, a 2 Fold MCS is delivered with one 27" full HD widescreen and one dummy monitor.

Optional number of monitors on MCS	
2 Fold MCS	2x 27" Full HD widescreen
4 Fold MCS	3 or 4x 27" Full HD wide screen, 1 x 58" XL screen
6 Fold MCS	4x 27" Full HD wide screen + 1 or 2x 27", 1x 58" XL + 1 or 2x 27" Full HD wide screen
3rd party MCS	1 or 2 x 27" or 32" Full HD widescreen monitor

MCS features	
Rotation range	350°
Transversal movement	Over a distance of 300 cm (118.1 inch)
Longitudinal movement	Over a distance of 330 cm (129.9 inch)
Height movement	Motorized 32 cm (12.6 inch)

1.4 Accessories

Standard accessories (patient table)
Mattress
Patient straps
Set of arm supports (if cradle option is chosen)
Drip stand
OP rail accessory clamps
Cable holders (15 pieces)

Optional accessories
Panhandle
Neuro Mattress (if Neuro tabletop)
Longer Cardio Mattress
Head support
Arm support, incl. arm pad
Neuro wedge
Table clamp
Set handgrips and clamps
Additional OP-rail with cable extension kit for control modules
Ratchet compressor
Additional OP-rail
Auxiliary OP rail for table base
Examination light
Arm support (height adjustable)
Table X-ray protection
Peripheral X-ray filter
Pulse cath arm support
Ceiling suspended radiation shield

The print quality of this copy is not an accurate representation of the original.

2 User interface

2.1 User interface in the examination room

In the examination room, the user interface comprises the on-screen display, touch screen module. (TSM) and the control module. Information is displayed on the on-screen display in the examination room. With the touch screen module Pro (option) images shown on the live and reference monitor can also be viewed here. The control module can be positioned on three sides of the patient table. The control module adjusts to the position to retain the intuitive button operation. The control module has a protection bar that prevents unintended activation of system.

FlexVision Pro is an extension to the FlexVision large 58 inch high resolution LCD for exam room, enabling flexible screen lay outs and full control (seamless mouse over) of up to 11 external sources including third party systems.

On-screen display
X-ray indicator
X-ray tube temperature condition
Radiographic parameters: kV, mA, ms
Rotation and angulation of the stand positions
Table height
Detector field size display
General system messages
Selected frame speed
Fluoroscopy mode
Integrated fluoroscopy time
Air Kerma dose (both rate and accumulated X-ray dose)
Dose Area Product (both rate and accumulated X-ray dose)

The print quality of this copy is not an accurate representation of the original.

Azurion viewpad controls

Azurion viewpad controls

- Run and image selection
- Exam and run cycle
- Review speed
- Run and exam overview
- Laser pointer
- Flagging exam and run for storage
- Storing reference image to reference monitors
- Select reference monitors for review and/or processing of previous run exposures
- Subtraction and image mask selection
- Select reference monitors for review and/or processing of previous run exposures
- Subtraction and image mask selection

Azurion touch screen module (TSM)

Azurion touch screen module (TSM)

- Acquisition setting
- Image Processing
- Automatic Position Control (APC), ‘unlimited’ number of stand positions can be stored and recalled from touch screen module.
- Quantitative Analysis (QA)
- Table Automatic Position Controller
- IntelliSpace Cardiovascular (ISCV) table side control
- Interventional tools table side control
- Xper Flex Cardio table side control
- CX50 table side control
- Table and geometry lock functions
- X-ray enable/disable
- Fluoroscopy buzzer reset
- Stopwatch
- Fluoro store
- Cleaning mode
- Control of monitors (Switchable Viewing or FlexVision)
- Table and geometry lock functions
- X-ray enable/disable
- Buzzer reset
- Stopwatch

The print quality of this copy is not an accurate representation of the original.

Control module

Touch screen module pro

Control module

Pivot Lock
Tabletop float
Tabletop motorized float
Table height position
Table tilt angle (if the tilt option is available)
Table cradle angle (if the cradle option is available)
Source Image Distance selection
Stand positioning
Store and recall of 'unlimited' number of stand positions via the touch screen module. Accept button to activate an APC position selected on touch screen module
Emergency stop button
Geometry reset button, which resets stand and table to a default service configurable starting position
Fluoroscopy mode selection as defined via settings
Positioning of shutters and wedges without radiation
Fluoro storage to record fluoroscopy up to 2000 images
Selection of the detector field size
Reset of the fluoroscopy buzzer
Selection of Roadmap Pro function (optional)
Selection of SmartMask function (optional)

ProcedureCards (standard)

ProcedureCards

The Azurion series include a range of ProcedureCards to help optimize and standardize system set-up for your cases, from routine to mixed procedures. ProcedureCards can increase the consistency of exams by offering presets (e.g. most-frequently used, default protocols and user-specified settings) on procedure-, physician- or departmental level. In addition, hospital checklists and/or protocols can be uploaded into the ProcedureCards to help safeguard the consistency of interventional procedures and help to minimize preparation errors.

Touch screen module pro (option)

With this option the X-ray images from the live as well as reference monitors will be shown on the touch screen module.
Image can be displayed ad manipulated on the touch screen module
Intuitive control of shutters and wedges by simply dragging the lines shown on top of the image
Intuitive zooming an panning functionality (also during fluoroscopy)
Virtual keyboard and touchpad to control external equipment (optional)
Turns the touchscreen into the pointing device in order to improve communication in ER/CR: when activated the pointer is shown on corresponding monitor

The print quality of this copy is not an accurate representation of the original.

Intuitive user interface with user guidance

The print quality of this copy is not an accurate representation of the original.

2.2 User interface in the Control room

The standard viewing console comprises of an acquisition monitor, review monitor, mouse and keyboard.

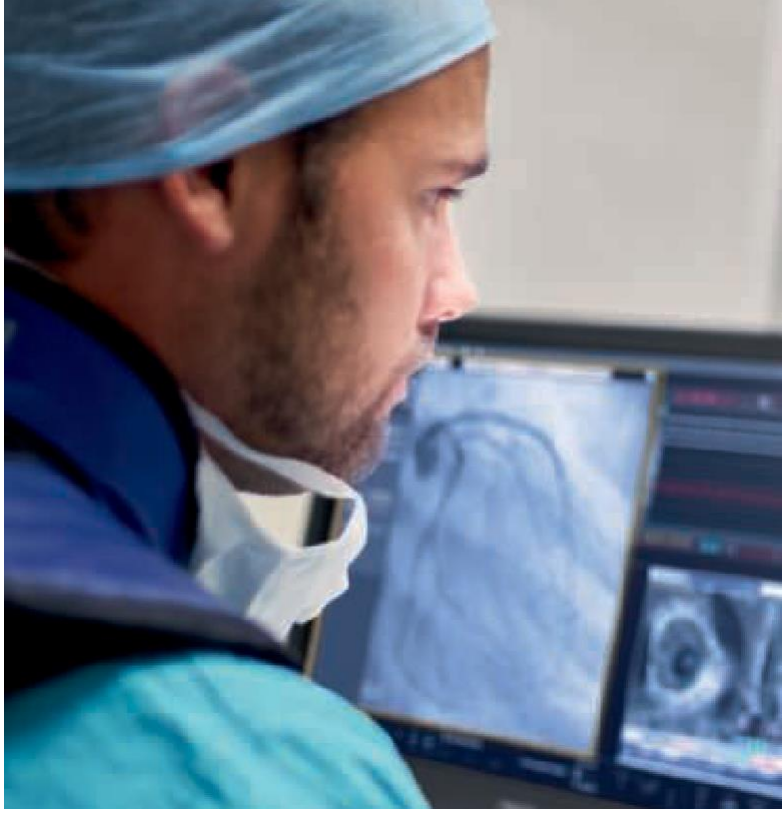

System information Azurion viewable at acquisition monitor

- Stopwatch and Time
- System guidance information
- Dose Area Product (DAP) and Air Kerma X-ray Dose (both rate and accumulated X-ray dose)
- Frame speed settings, fluoroscopy mode and accumulated fluoroscopy time
- Exposure and fluoroscopy settings, such as Voltage (kV), Current (mA) and pulse time (ms)
- Stand position information, such as rotation, angulation and SID
- Table information such as height, cradle, tilt

Azurion acquisition monitor

- Patient scheduling
- Select patient for acquisition
- Acquisition setting
- Review runs
- Archive runs
- Step through file, run or images
- File and run overview
- Image processing features such as contrast, brightness and edge enhancement
- Flagging of runs or images for transfer
- Image annotation
- Automatic printing
- Video invert
- Zoom and pan image
- Electronic shutters
- Toggle switch physio
- Store/delete images/runs
- Store fluoro
- Pixel shift

Azurion review monitor

- Quantitative Analysis Packages, optional
- Subtraction, optional
- Move or renew mask, optional
- Landmarking (increase/decrease of subtraction degree), optional
- View trace, optional
- Reset fluoroscopy timer and switch X-ray on/off
- Geometry lock
- Procedure card manager
- File and run cycle
- File, run and image stepping
- Run and file overview
- Reset fluoroscopy timer and switch X-ray on/off
- Parallel Working (standard)
- Customization and electronic help

Optional

FlexSpot	FlexSpot offers an integrated workspot in the Control room with up to three high resolution QHD (2560x1440) displays.

Review module

- Power on/off
- Video Only mode
- File and run cycle
- File, Run, and Image stepping
- Run and file overview
- Enable/disable X-ray
- Geo disable

The print quality of this copy is not an accurate representation of the original.

Pedestal

User interface options

Pedestal	• The pedestal creates a flexible workspot for operating the system from the examination room. • The pedestal is equipped with a control module and can also hold the touch screen module, ViewPad and X-ray footswitch. • The control module can be disconnected from the pedestal and attached to the table OP rail. • The pedestal can be positioned freely around the patient table and can be put aside when not in use.

Second control module, third touch screen module

Second control module, third touch screen module	The system can be extended with additional user interface modules that have the same functionality as the modules in the examination room. Adding a second control module in the Control room works in a master/ slave configuration.
Contrast injectors	The system can be connected to contrast injectors to enhance procedures.

Wireless footswitch

Wireless footswitch	• Our Wireless footswitch streamlines workflow, reduces clutter, and simplifies preparation and cleanup where it's needed most – at the point of patient treatment. Clinicians can wirelessly control the X-ray system from any convenient position around the table. • No sterile covers are needed with the IPX8 certified waterproof design. It's one of Philips Live Image Guidance solutions for X-ray environments.
Additional Options:	Intercom Automatic Position Controller (system and table)

The print quality of this copy is not an accurate representation of the original.

3 X-ray generation

 The print quality of this copy is not an accurate representation of the original.

3.1 X-ray generator

The Certeray generator is enhanced for the latest interventional X-ray needs

Technical specifications

Generated power	Microprocessor-controlled, 100 kW high frequency generator with MOSFET technology
Minimum switching time	Quartz-controlled power switch, with a minimum switching time of one ms
Voltage range	40 to 125 kV
Maximum current	1000 mA at 100 kV
Maximum continuous power	2.5 kW for 0.25 hours, 1.5 kW for eight hours
Nominal power (highest electrical power)	100 kW (1000 mA at 100 kV)

3.2 X-ray tube

The Azurion 7 is provided with the high power MRC 200+ GS 0508 X-ray tube which allows for very high heat dissipation, enabling SpectraBeam filtration to manage the patient X-ray dose.

Technical specifications

Focal spot size and loadability	0.5/0.8 mm nominal focal spot values with maximal 45 respectively 85 kW loadability based on 250 W anode reference power
Grid-switched pulsed fluoroscopy	yes
Fluoro power for 10 minutes	4,500 W
Fluoro power for 20 minutes	4,000 W
Maximum X-ray field with SID = 100	28 x 28 cm
Maximum X-ray field with SID = 120	33,6 x 33,6 cm
Maximum X-ray field with SID = 70	19,6 x 19,6 cm
Maximum anode cooling rate	1750 kHU/min
Max. anode heat storage	6.4 MHU
Max. assembly heat storage	9.4 MHU
Anode heat dissipation	21,000 W
Continuous anode heat dissipation	3,500 W
Max. assembly continuous heat dissipation	4,000 W
Extra pre-filtration	SpectraBeam dose management with 0.2, 0.5, and 1.0 mm Copper equivalent SpectraBeam filters
Cooling liquid	Oil cooled X-ray tube with thermal safety switch
Anode target angle	9°
Anode cooling method	Direct anode oil cooling system with 200 mm anode diameter

3.2 X-ray tube

DICOM Radiation Dose Structured Report

Collection of dose relevant parameters and settings with export possibility to a DICOM database (e.g. PACS, RIS). The reported data can be used for analysis, to further manage X-ray dose. The DICOM RDSR function collects and exports the required data. The software to provide the DICOM data for analysis and alerting needs to be acquired separately. secondary capture dose report function allows you to save and transfer, manually or automatically, a patient dose report to PACS in DICOM secondary capture format.

The print quality of this copy is not an accurate representation of the original.

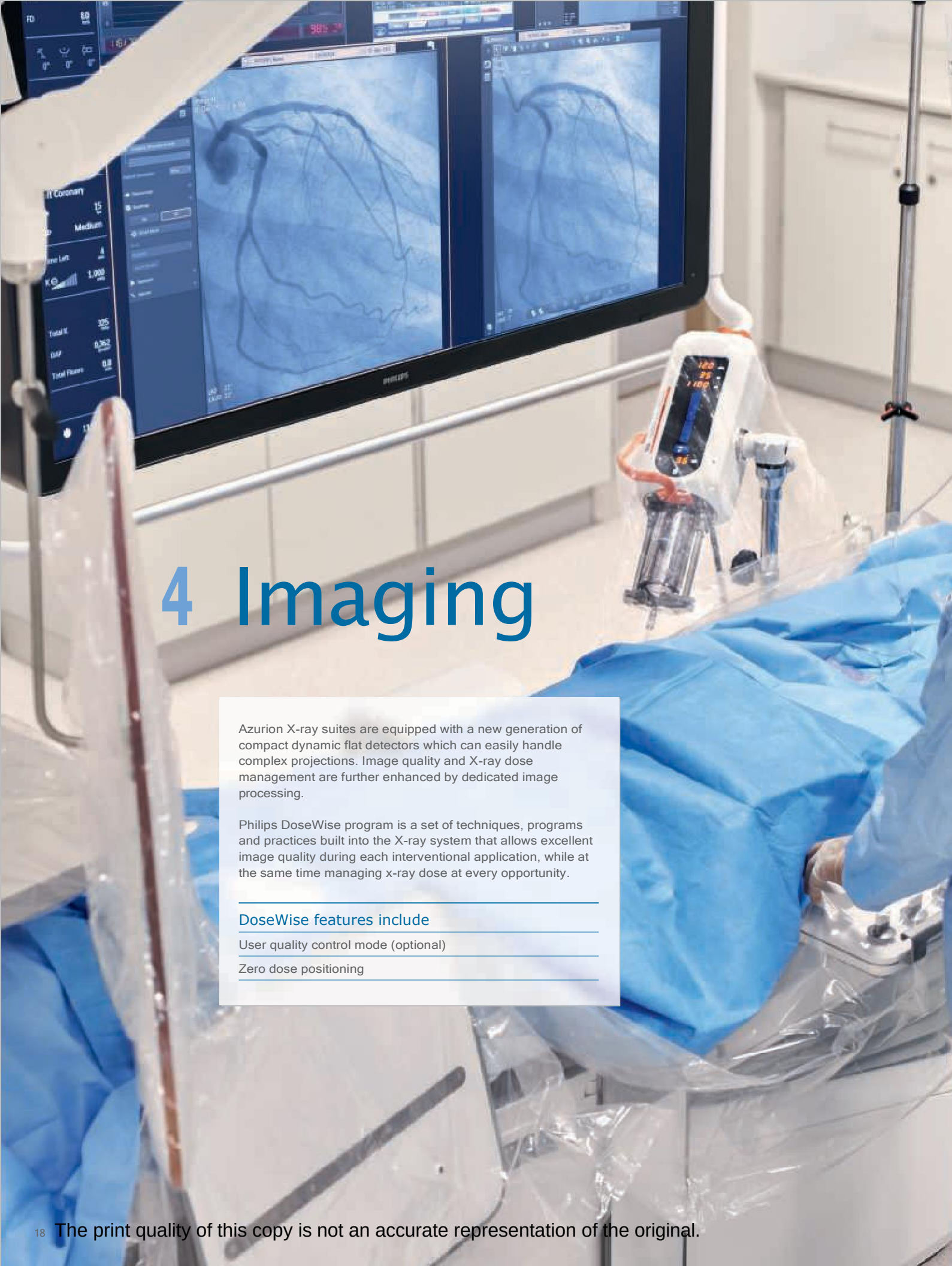

4 Imaging

Azurion X-ray suites are equipped with a new generation of compact dynamic flat detectors which can easily handle complex projections. Image quality and X-ray dose management are further enhanced by dedicated image processing.

Philips DoseWise program is a set of techniques, programs and practices built into the X-ray system that allows excellent image quality during each interventional application, while at the same time managing x-ray dose at every opportunity.

DoseWise features include

User quality control mode (optional)

Zero dose positioning

The print quality of this copy is not an accurate representation of the original.

4.1 ClarityIQ technology (Optional)

To create a breakthrough in interventional imaging and dose management, we evaluated the performance of the system as a whole instead of its individual components. During this process the entire digital imaging pipeline was redesigned, all relevant system components were improved and in total more than 500 parameters were clinically fine-tuned.

1. Powerful image processing technology
   Clarity IQ technology includes state-of-the-art, realtime image processing developed by Philips Research and based on the latest parallel computing technologies. Benefits include
   - Noise and artifact reduction, also on moving structures and objects;
   - Image and edge enhancements;
   - Automatic real-time patient and accidental table motion correction on live images.

2. Completely redesigned, flexible digital imaging pipeline
   ClarityIQ technology utilizes a flexible digital imaging pipeline from tube to display that is tailored for each and every application area such as cardio or neuro. This gives the flexibility to select virtually unlimited application specific configurations and obtain superb images on your full range of clinical applications and patient types including patients with a high BMI.

3. More than 500 clinically fine-tuned system parameters and enhanced relevant system components across the entire imaging chain
   With ClarityIQ technology over 500 system parameters are fine-tuned for each application area; the result of years of Philips' clinical leadership. ClarityIQ technology also enhances some essential system components. It is now possible to manage radiation by increased filtering, use small focal spot sizes as well as shorter pulses with the grid switching technology of Philips MRC tube and accompanying generator.

4.2 Dynamic Flat Detector

The dynamic Flat Detector of Philips provides excellent image quality.

Specifications	
Size of detector housing	47 cm (18 inch) diagonal including BodyGuard
Maximum field of view	30 cm (12 inch) diagonal
Image matrix	1344 x 1344 pixels at 16 bits depth
Detector zoom fields	30, 27, 22, 19, 15 cm (12, 11, 8, 7, 6 inch) diagonal square formats
Pixel pitch	154 µm x 154 µm
Detector bit depth	16 bits
Nyquist frequency	3.25 lp/mm
DQE (0)	77% at 0 lp/mm
MTF at 1 lp/mm	> 60%

The print quality of this copy is not an accurate representation of the original.

4.3 Fluoroscopy

Per application, three fluoro modes are available at tableside which can be programmed via settings. Each mode can be programmed with a different composition of ClarityIQ parameters. ClarityIQ technology provides a flexible digital image pipeline, powerful image processing technology and clinically fine-tuned parameters across the entire imaging chain.

Specifications	
Extra pre-filtration	SpectraBeam filters: 0.2, 0.5 and 1.0 mm Copper equivalent
Fluoroscopy image processing	Recursive filtering, localized contrastadaptive contour enhancement, SPIRIT filters and Xres algorithm
Pulse rates	Default at 3.75, 7.5, 15 and 30 pulses per second
Frame grabbing of static fluoroscopy images	Yes
Fluoroscopy storage	Default storage of the last 20 sec. of fluoroscopy for reference or archiving
Grid-switched pulsed fluoroscopy	Yes

4.4 Digital Acquisition

The system can be customized with a virtually unlimited number of acquisition programs for digital angiography and digital subtraction angiography. Xres is a real-time processing algorithm that provides excellent image quality through enhanced contrast and sharpness. It exploits the benefits of the fully digital detector to reduce noise in clinical images.

Specifications	
Standard configuration	0,5 to 30 images/sec
image storage	100,000 images (based on $1k^2$)

Optional:	
Image & Processing	QA optional Rotational scan optional CardiacSwing Physio Viewing Bolus Chase Subtract Bolus Chase Reconstruction DSA (Digital subtracted angio) Image rate 50/60 images/sec Roadmap pro/SmartMask Dual Fluoro Data integrity UPS

The print quality of this copy is not an accurate representation of the original.

5 Viewing

5.1 Monitors

The system is delivered standard with one 27" LCD monitor for live and ref signal. The monitor is mounted on the Philips Monitor Ceiling Suspension including motorized height adjustment. Two 24" LCD color monitors with parallel working are standard in the Control room.

27" LCD Monitor ER and 24" LCD Monitor CR	
Format	Native Format 1920 x 1080
Wide viewing angle	Yes (approximately 178°)
High brightness	Default controlled brightness (400 Cd/m^2)
Video signal	Compatible with video signals up to 1920x1200 and from Ultrasound and IVUS

24" LCD CR	
Active screen size (diagonal)	598.6 mm (23.6")
Active screen size	(H X V) 521.3 mm X 293.2 mm (20.5" X 11.5")
Resolution	2MP (1920 X 1080)
Viewing angle	89 degree
Maximum Luminescence	400 cd/m^2 typical
DICOM calibrated luminescence	350 cd/m^2
Contrast ratio	1000:1 typical, 700:1 minimum
Response time	(Tr+Tf) <40ms
Power requirements (nominal)	100 - 240 V (50-60 Hz)
Power consumption (max)	<55W
Tilt	+5°/+20°

FlexVision XL

Optional monitors

FlexVision XL	
Size	58-inch, 8 Megapixel color LCD
Format	Native resolution: 3840x2160
High Brightness	Max: 700 Cd/m^2 (typical) stabilized: 400 Cd/m^2
Contrast ratio	1:4000 (typical)
Wide viewing angle	Approx. 176 degrees
Stabilization control	Constant brightness stabilization control
Lookup table	Lookup tables for gray-scale, color and DICOM transfer function
Protection screen	Full protective screen Ingress Protection: IP-21

FlexVision XL

FlexVision XL is a viewing concept that provides outstanding viewing flexibility, using a large, high definition LCD screen, it allows you to display multiple images in a variety of layouts - each tailored for your specific procedure. The SuperZoom feature lets you enlarge small details of anatomy, devices and data (ECG signals and hemodynamic data) for excellent visibility for confident decisions during challenging procedures.

The print quality of this copy is not an accurate representation of the original.

FlexVision Pro

With FlexVision Pro, user can control FlexVision XL and video sources on FlexVision XL through wireless mouse in Examination Room as well as virtual keyboard and touchpad on the touch screen module in the examination room. An operator can resize images and adjust the screen layout during the procedure without going into configuration.

27" LCD ER	
Size	27 inch high brightness color TFT-LCD display
Format	Native format 1920x1080 Full HD
Grey-scale resolution	10 bit gray-scale resolution with gray-scale correction
Wide viewing angle	Wide viewing angle (approx. 178 degrees)
High Brightness	High brightness (max 650 Cd/m², default 400 Cd/m²)
Luminance stability	Long term luminance stability through backlight stabilization circuit
Brightness control	Automatic brightness control with backlight sensor
Control functions	Control functions on side
Setting	User programmable and standard reference setting
On-screen display	Yes
Lookup table	Internal selectable lookup table for gray-scale transfer function, including DICOM
Power supply	Internal power supply (100-240 VAC)
Protection screen	Yes

32" LCD ER (optional requires 3rd party boom)	
Size	32 inch high brightness color TFT-LCD display
Format	Native format 1920x1080 Full HD
Grey-scale resolution	10 bit gray-scale resolution with gray-scale correction
Wide viewing angle	Wide viewing angle (approx. 178 degrees)
High Brightness	High brightness (max 500 Cd/m², default 400 Cd/m²)
Luminance stability	Long term luminance stability through backlight stabilization circuit
Brightness control	Automatic brightness control with backlight sensor
Control functions	Control functions on side
Setting	User programmable and standard reference setting
On-screen display	Yes
Lookup table	Internal selectable lookup table for gray-scale transfer function, including DICOM
Power supply	Internal power supply (100-240 VAC)
Protection screen	Yes

The print quality of this copy is not an accurate representation of the original.

Optional monitors in Control room

Flexspot

Integrated work spot in the Control room to view, control and manipulate all applications within a single view

Flexspot

Flexspot	
Size	27 inch color TFT-LCD display
Format	Native format 2560x1440 Quad HD
High Brightness	High brightness (max 500 Cd/m², default 350 Cd/m²)
Wide viewing angle	Wide viewing angle (approx. 178 degrees)
Luminance stability	Long term luminance stability through backlight stabilization circuit
Brightness control	Automatic brightness control with backlight sensor
Control functions	Control functions on side
Setting	User programmable and standard reference setting
On-screen display	yes
Lookup table	Internal selectable lookup table for gray-scale transfer function, including DICOM
Power supply	Internal power supply (100-240 VAC)
Connectivity	Integrated USB hub

Additional Flexspot

This feature adds a second FlexSpot workspot with its own high resolution Quad HD (2560x1440) display as well as its own keyboard and mouse.

- Up to 1 video source can be displayed at a time on the add-on FlexSpot display.
- The X-ray status area with all X-ray details can be shown/hidden.

2nd display for FlexSpot

This feature adds a second Quad HD full (2560x1440) high resolution monitor to the primary FlexSpot workspot. It enables the user to show up to 8 video sources on a single FlexSpot workspot by combining 2 high resolution displays. Keyboard and mouse control is seamless across the 2 displays.

Additional Flexspot and 2nd display

Optional viewing
MultiSwitch (Control room)
MultiVision (exam room)
Optional ref monoplane

Switchable Monitors

The Switchable Monitor option gives you full control of what you display and where you display it on your exam room monitors. Display up to 16 monitor inputs via the touch screen module (TSM), including the live image, reference image, frontal and lateral projections, hemo data and equipment from other vendors.

The print quality of this copy is not an accurate representation of the original.

6 Additional options

Additional options

Subtracted Bolus Chase
2D Quantification packages
Quantitative Coronary Analysis (QCA)
Left Ventricular Analysis (LVA)
Right Ventricular Analysis (RVA)
Quantitative Vascular Analysis (QVA)
QA Basic measurements
Full Autocal
Measurement
Workflow enhancement options
CardiacSwing
Rotational Scan
Physio Viewing with ECG triggering
Integrated CX50 compact ultrasound
Xper Flex Cardio

Integration options
IntelliSpace Portal integration
CX50 video coupling
IE33 video coupling
EchoNavigator
DoseAware
Ambient Experience
XperFlexCardio on touch screen module
Workflow
RIS/CIS DICOM interface
DVD writer
Medical DVD recorder

The print quality of this copy is not an accurate representation of the original.

7 Room layout

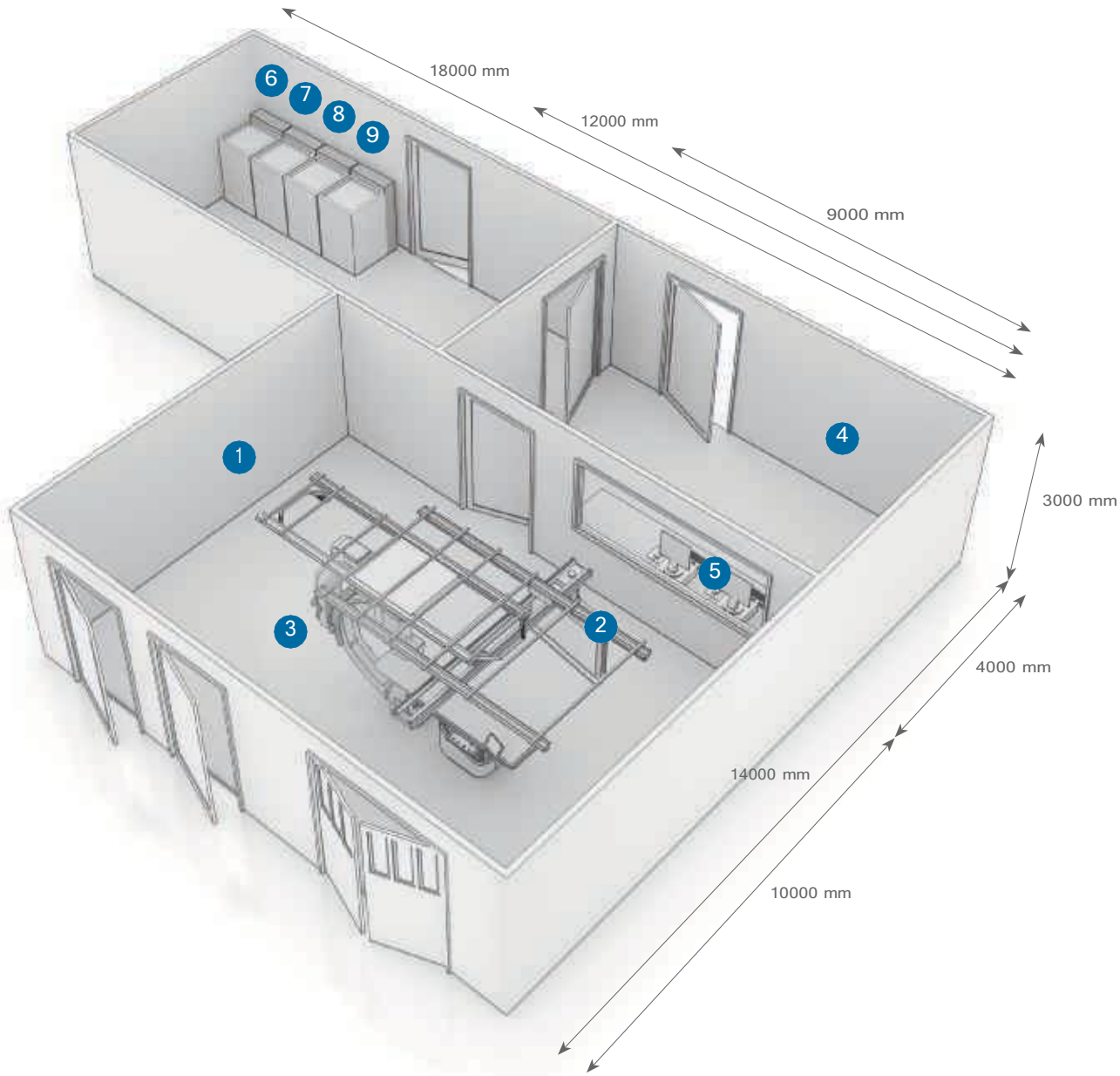

Conceptual drawing of a room layout

Top view

1. Examination room
2. LCD monitor ceiling suspension
3. Ceiling mounted PolyG stand
4. Control room
5. Viewing console
6. Certeray generator
7. Geometry cabinet
8. System cabinet
9. FlexVision cabinet

The print quality of this copy is not an accurate representation of the original.

Front view ceiling mounted

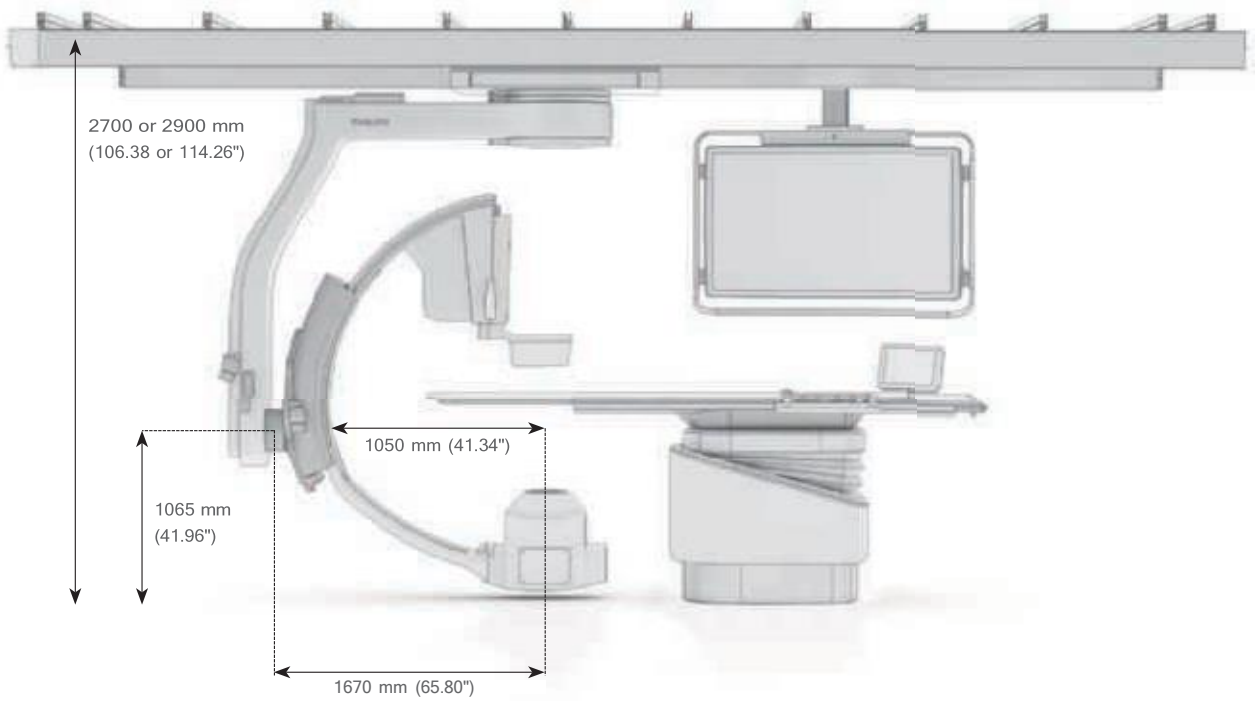

Front view floor mounted

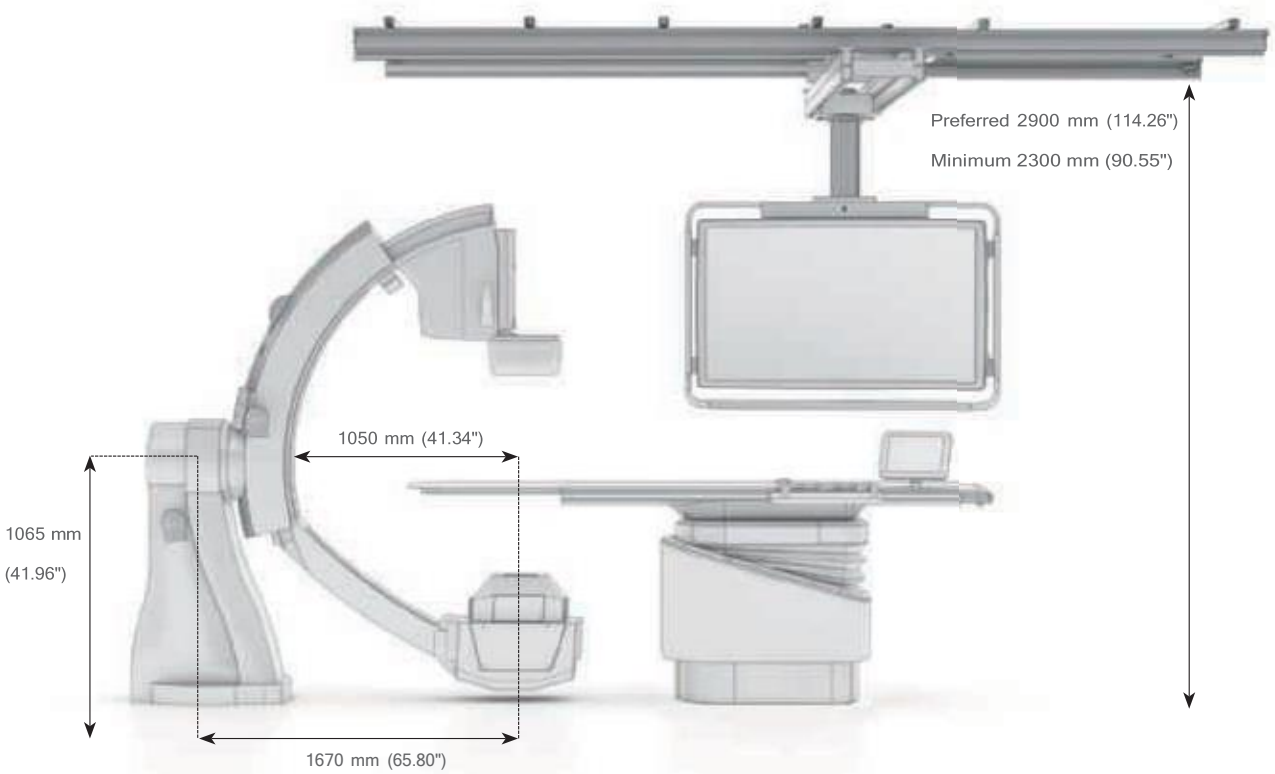

The print quality of this copy is not an accurate representation of the original.

© 201176 Koninklijke Philips N.V.. All rights reserved.
Specifications are subject to change without notice.

www.philips.com

4512 2391 61040010 MONTH 2016

The print quality of this copy is not an accurate representation of the original.