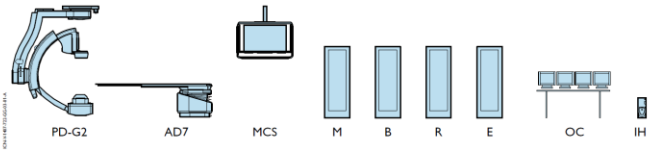

Cable no.	Connection				Cable length [m]
	From		To		
1.	M	Main cabinet	PD-G2	Ceiling stand Poly G2	12.2
	-	Generator cabinet			
2.	M	Main cabinet	MCS	Monitor FlexVision	18.5
	R	Peripheral cabinet			
	B	Imaging cabinet			
3.	M	Main cabinet	AD7	Patient table	13.5
	R	Peripheral cabinet			
4.	M	Main cabinet	-	Control room connection box	18.5
	R	Peripheral cabinet			
5.	MCS	Monitor FlexVision	OC	Control room monitors	20
6.	M	Main cabinet	R	Peripheral cabinet	5
			B	Imaging cabinet	
7.	B	Imaging cabinet	R	Peripheral cabinet	8
8.	E	Generator cabinet	M	Main cabinet	8
9.	-	Interventional hardware	R	Peripheral cabinet	25
			B	Imaging cabinet	

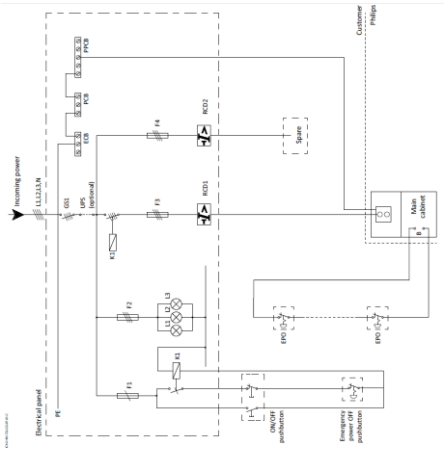

Requirement	Specification		
Voltage	3x 400 - 480V ±10%		
Frequency	50 - 60 Hz		
Mains switch (GS1)	125 A		
Fuse protection			
F1	F2	F3	F4
6 A	2 A	63 - 125 A (slowblow / gG curve)	16 A
Residual current device			
RCD1		RCD2	
63 - 125 A / 0.03 A		16 / 0.03 A	

Vi trenger en kabel trukket fram til vårt M-kabinett med 4m slakk målt fra overkant av bak-kabinettet ☺

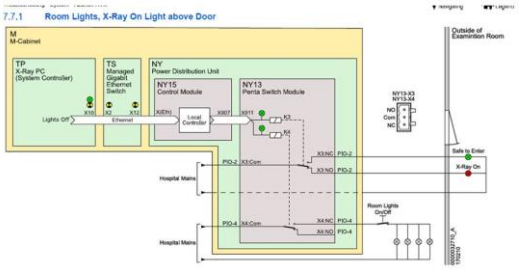

Equipment	Dimensions (W×D×H) [mm]	Mass [kg]
Ceiling stand (Poly G2 FD12)	3374×2174×2790 (full movement range excl. rails)	1085
Examination light	-	14
Radiation Shield on ceiling	-	30
Radiation Shield on table	-	30
Workstation in control room	several parts	52
Monitor ceiling suspension (FlexVision 58")	Ceiling carriage: 3800×320×250 Monitor frame: 1531×1020	250 (max)
AD7 Patient Table - pivot	3190×608×1072	490
Interventional hardware - Interventional tools	Several parts Largest: 479×425×189	33
Injector pedestal (Medrad Mark 7 Arterion)	518×518×1051	91
Main cabinet (M-cabinet) with CRC extension	550×780×1955	375
Cable management cabinet	300×253×1775	-
Peripheral cabinet (R-cabinet) with CRC	550×680×1955	200
Certeray cabinet (E-cabinet) with CRC	550×680×1955	145
Imaging cabinet (B) with CRC	550×680×1955	200

Requirement	Specification
General requirements	
Temperature	+18 to +28 °C
Maximum temperature change	0,5 °C/minute.
Relative humidity	20 - 80%, non-condensing (non-condensing)
Examination room	
Heat emission	Average 1900 W
Control room	
Heat emission	Average 500 W
Technical room	
Heat emission	Average 2400 W

Liquid cooling

The Philips equipment has no requirements in this discipline.

Water

The Philips equipment has no requirements in this discipline.

Sewerage

The Philips equipment has no requirements in this discipline.

Plata er 525 x 525 mm.
Da stemmer 534 x534 mm åpning i gulvet.

Universal AD5/AD7 Floorplate (9896.002.05302)
525 x 525 mm; thickness 30 mm

Power quality

The power supply to the system must meet the following voltage and frequency requirements.

Requirement	Specification
Voltage	3x 400 - 480V ±10%
Frequency	50 - 60 Hz

Power consumption

Requirement	Specification
Fuse protection [I_{fuse}]	63 - 125 A (slowblow / gG curve)
Mains switch	125 A
Input rating	'76 A at 400 V; 73 A at 415 V; 69 A at 440 V; 66 A at 460 V; 63 A at 480 V (50/60 Hz)
Peak currents	330 A (8.33 ms)
Maximum power	100 kVA
Mains resistance	max 140 mΩ for 400 V; max 215 mΩ for 415 V; max 325 mΩ for 440 V; max 400 mΩ for 460 V ;max 465 mΩ for 480 V
Wiring requirement	min 13.3 mm2 max 21.2 mm2

Ceiling requirements table

Overview of ceiling mounted equipment and fixation specifications

Refer to the chapter *Drawings*, sheet *Ceiling provisions* for location, quantities and responsibilities.

Equipment	Weight [kg]	Fixings	Forces [N]
Examination light (on ceiling)	14	-	-
Radiation shield (on ceiling)	30	-	-
Ceiling stand (PolyDiagnost G2 FD12)	1085	28x M10x40	11742 (stand)
Monitor ceiling suspension Flexvision 58" (slim line MCS)	250 (max)	16x M10x40	4870 (Max. ceiling load required abusive)

Equipment	Weight [kg]	Fixings	Forces [N]
Main cabinet (M-cabinet) with CRC extension	375	-	-
Cable management Cabinet	-	-	-
Peripheral cabinet (R-cabinet) with CRC	200	-	-
Certeray Cabinet (E-cabinet) with CRC	145	-	-
Imaging cabinet (B-cabinet) with CRC	200	-	-
Workstation in Control Room	52	-	-
AD7 Patient Table (pivot)	450	4x M16	8125 (pull force)

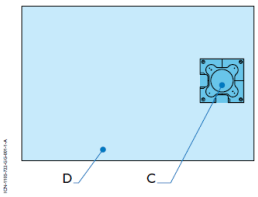

Levelness area

Requirement	Specification
Equipment floor levelness (A)	1 mm/m (measured between any point of the floor area of the equipment) (C)
Room floor levelness (D)	2 mm/m (recommended)
Floor waviness (B)	Within the tolerances of the floor levelness (A) & (C, D)