Havforskningsinstituttet – Rederiavdelingen

Fartøy: **Kronprins Haakon**

VEDLEGG 1: VERKSTEDSPESIFIKASJON

Nummer :01 **Dato utført :** **Sign :**

Konto nr : **Lokalitet/plassering : Hovedhangar**

Komponent: : Demontering og fjerning av eksisterende rulleporter i hovedhangar

JOBB INFORMASJON/ DETALJER	INKLUDERT I ARBEID	
Fjerning av eksisterende rulleportsystemer i hovedhangar – en (1) rulleport mot styrbord skuteside og en (1) rulleport akter mot arbeidsdekk - til sammen to (2) stk. rulleporter. Se vedlagte tegninger av eksisterende rulleportsystem fra Macgregor, som er installert om bord, for nærmere detaljer. Verkstedet skal utføre alt arbeid som er nødvendig for å fjerne eksisterende rulleportsystemer. Tilknyttet dampmanifoldsystem (*steam manifold system*) skal også fjernes. Det er installert ett slikt system på hver side av hver port, til sammen fire (4) system. Det er flenser på rørene inne i hovedhanger som kan blendes. Det er videre to skottgjennomføringer som må sveises.		Gassfri sertifikat
		Ekstra belysning
		Ventilasjon
		Tilkomst
		Rengjøring før
		Rengjøring etter
		Stillas
		Krane
		Transport til verksted
		Transport ombord
		Sandblåsing
		Priming/Grunning
		Maling
		Trykk/Vacuum testing
		X-ray
		Ultrasonic testing
		Brannvakt/Sikkerhetsvakt
		Isolasjonstest/Megging
		Rette opp tegninger
		ARBEIDET SKAL KONTROLL. AV:
		Klasse (DnV)
	x	Teknisk inspektør
		Kaptein/Maskinsjef
		Utstyrs leverandør
		MATERIAL:
	x	Verksteds levering
		Rederi levering (bunnstoff)
		VEDLEGG:
		Foto
	x	Tegning
		Skisse
		Eksempel/Prøve

REV	REASON	DATE	SIGN
A	ISSUED FOR APPROVAL	2016-02-16	MAM
B	NOTE, DESCRIPTION UPDATED, WOODEN DECK, ITEM 14-16, SECTION F-F ADDED	2016-03-30	MAM
C	DETAIL D UPDATED	2016-04-12	RJA
D	DETAIL D UPDATED	2016-04-13	RJA

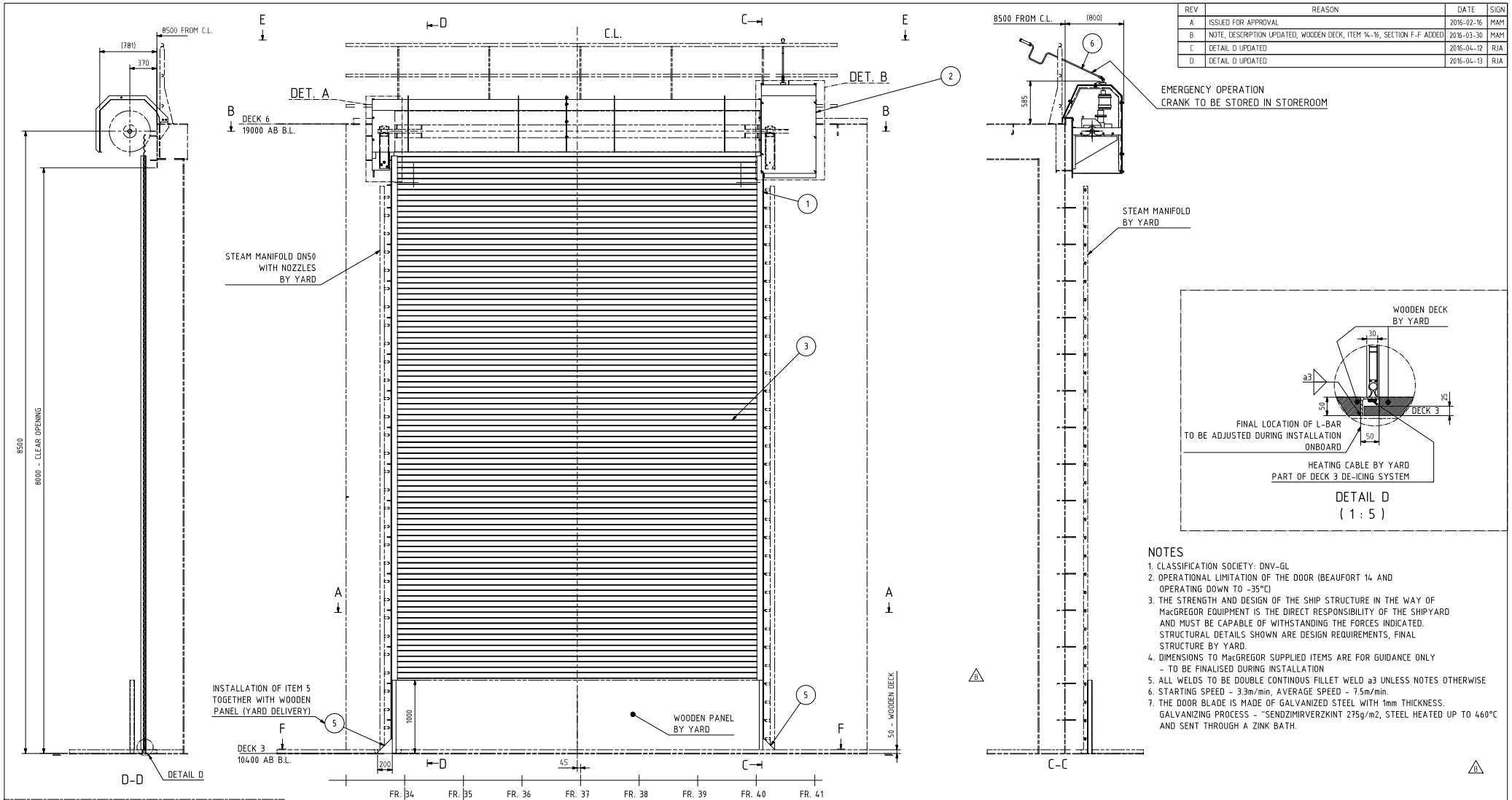

NOTES

1. CLASSIFICATION SOCIETY: DNV-GL
2. OPERATIONAL LIMITATION OF THE DOOR (BEAUFORT 14 AND OPERATING DOWN TO -35°C)
3. THE STRENGTH AND DESIGN OF THE SHIP STRUCTURE IN THE WAY OF MacGREGOR EQUIPMENT IS THE DIRECT RESPONSIBILITY OF THE SHIPYARD AND MUST BE CAPABLE OF WITHSTANDING THE FORCES INDICATED. STRUCTURAL DETAILS SHOWN ARE DESIGN REQUIREMENTS, FINAL STRUCTURE BY YARD.
4. DIMENSIONS TO MacGREGOR SUPPLIED ITEMS ARE FOR GUIDANCE ONLY - TO BE FINALISED DURING INSTALLATION
5. ALL WELDS TO BE DOUBLE CONTINOUS FILLET WELD a3 UNLESS NOTES OTHERWISE
6. STARTING SPEED - 3.3m/min, AVERAGE SPEED - 7.5m/min.
7. THE DOOR BLADE IS MADE OF GALVANIZED STEEL WITH 1mm THICKNESS. GALVANIZING PROCESS - "SENDZIMIRVERZKINT 275g/m2, STEEL HEATED UP TO 460°C AND SENT THROUGH A ZINK BATH.

ITEM No	QTY	UN	DRAWING No ARTICLE No	ITEM MASS	DESCRIPTION/PART	TYPE	SIZE/DIMENSION	MATERIAL
13	24	PC	DIN 125	0	WASHER,plain,SS	DIN 125	17/30x3	A4-70
12	12	PC		0,1	SCREW,hex,SS	DIN 933	M16-55	A4-70
11	12	PC		0	NUT,SS	DIN 934	M16	A4-70
10	2	PC		17,2	CONSOLE	40012396		
9	1	PC		151	DRIVE UNIT	ELEKTROMAT FLOATING FOOT	SG115F SI-14.8.7	
8	2	PC		11,9	PEDESTAL BEARING	40003016	SS	
7	1	PC		14,8	TORQUE MOUNTING	30063962		
6	1	PC	41-03217	3,1	HAND CRANK & EXTENSION	NHK 215+EXT		
5	2	PC	41-03218	8,8	PANEL HOLDER	CHANNEL BAR		
4	1	PC		0	STORM HOOKS SET	1.1460		
3	1	PC		920	ROLLER GATE	1.1460-1	OPENING 4870x8000	
2	1	PC	41-03199	362,9	COVER ASSEMBLY			
1	1	PC	41-03206	533,7	COAMING ASSEMBLY			

MACGREGOR

MACGREGOR NORWAY AS
Bleivassvegen 105
5347 Agotnes, Norway
Phone +47 56 31 33 00

CUSTOMER: FINCANTIERI

General Tolerance: ISO4.3H Grade Medium / NS1432 Grade A

PROJECT: NB 6255

According to international laws this drawing is the property of Cargotec. The drawing and contents cannot be made public, copied or otherwise used, without our approval.

41-03198-01.dwg

ITEM K1 - MAIN HANGAR ROLLER GATE
INTERFACE & INSTALLATION ARRANGEMENT

MASS	2064 kg
General Scale	1:25
APPROVED BY	-
CHECKED BY	RJA
DRAWN BY	MAM
DATE	2016-02-16
SHEET	1(2)
REVISION	D

PROJECT No: 9.BGO-1502
DRAWING No: 41-03198

DRAWING PRODUCED IN INVENTOR

REV	REASON	DATE	SIGN
A	ISSUED FOR APPROVAL	2016-02-17	MAM
B	GEOMETRY UPDATE	2016-02-19	MAM
C	WOODEN DECK, ITEM 14-17, SECTION E-E ADDED, NOTE UPDATED	2016-03-30	MAM
D	DET.D, E HAVE BEEN REMOVED, DET.F HAS BEEN ADDED	2016-04-13	RJA

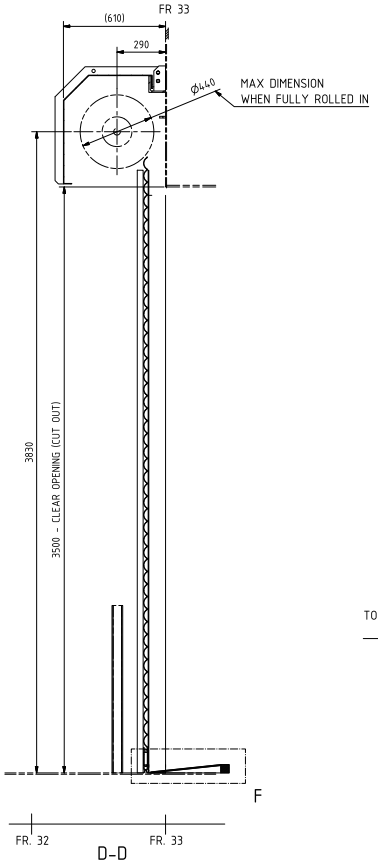

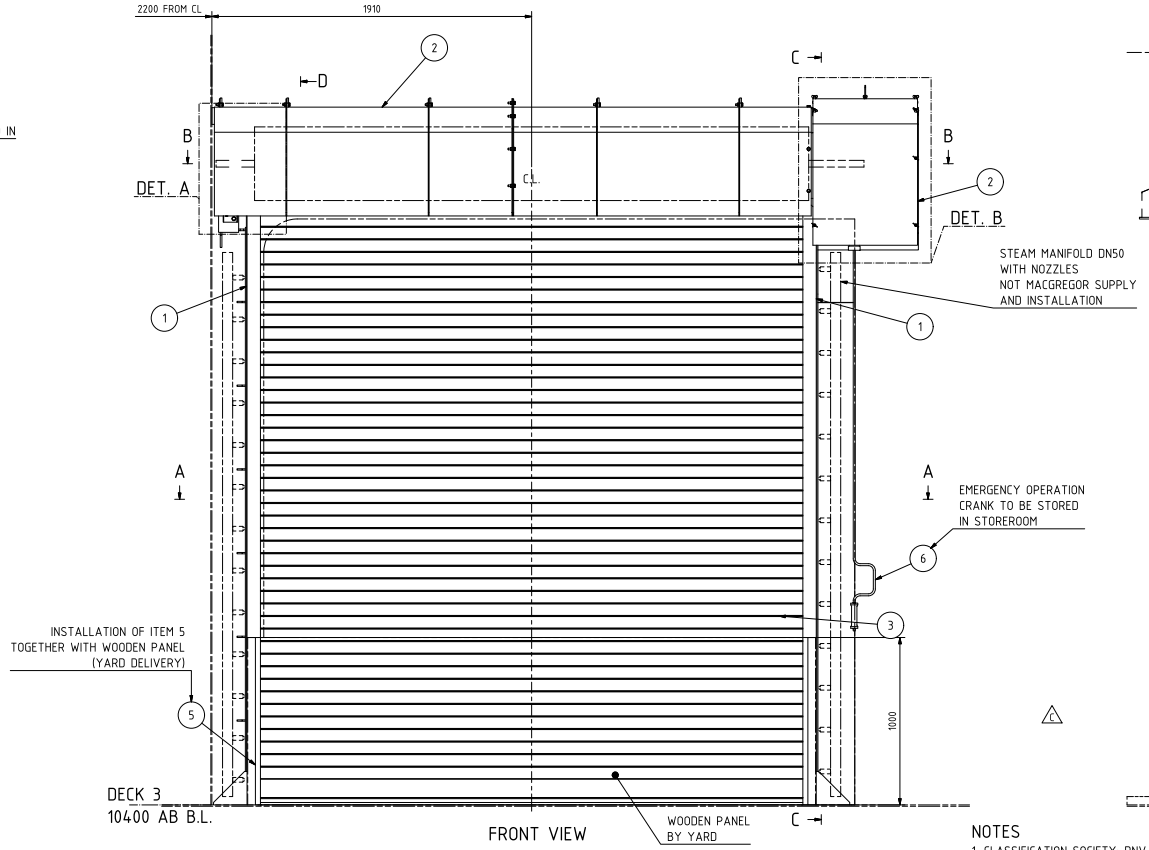

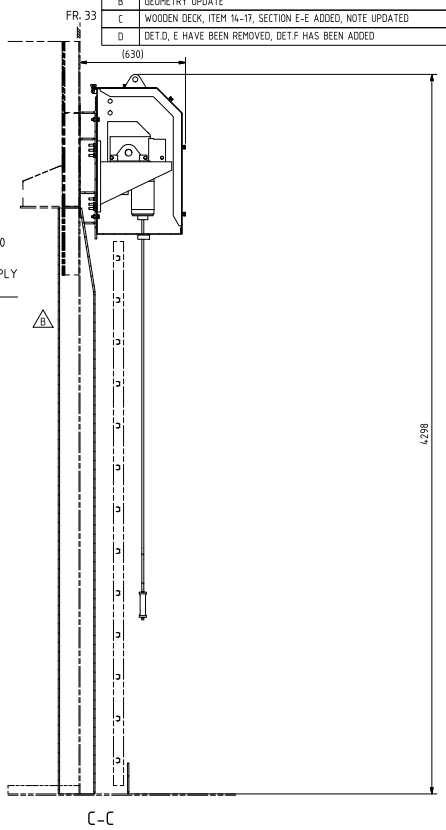

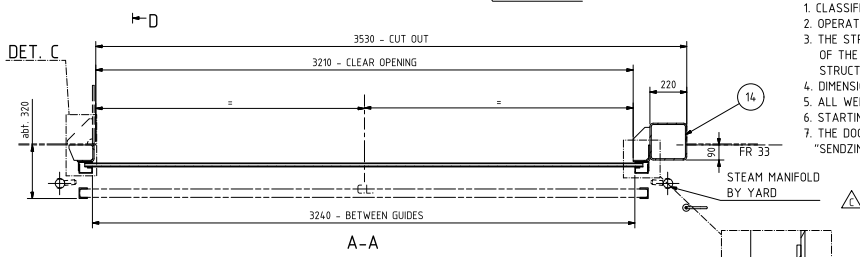

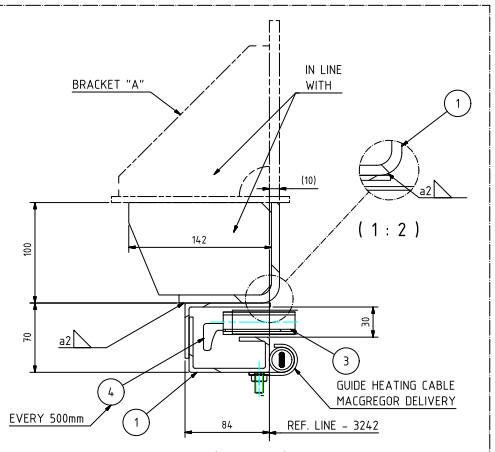

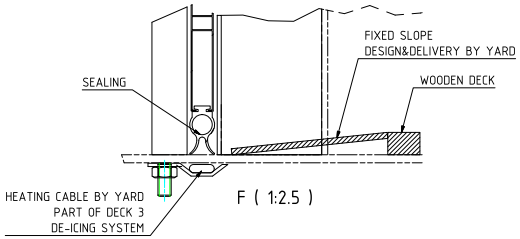

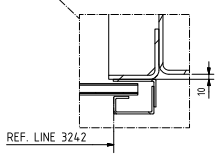

NOTES

1. CLASSIFICATION SOCIETY: DNV-GL
2. OPERATIONAL LIMITATION OF THE DOOR (BEAUFORT 14 AND OPERATING DOWN TO -35°C)
3. THE STRENGTH AND DESIGN OF THE SHIP STRUCTURE IN THE WAY OF MacGREGOR EQUIPMENT IS THE DIRECT RESPONSIBILITY OF THE SHIPYARD AND MUST BE CAPABLE OF WITHSTANDING THE FORCES INDICATED. STRUCTURAL DETAILS SHOWN ARE DESIGN REQUIREMENTS, FINAL STRUCTURE BY YARD.
4. DIMENSIONS TO MacGREGOR SUPPLIED ITEMS ARE FOR GUIDANCE ONLY - TO BE FINALISED DURING INSTALLATION
5. ALL WELDS TO BE DOUBLE CONTINOUS FILLET WELD a3 UNLESS NOTES OTHERWISE
6. STARTING SPEED - 6.6m/min, AVERAGE SPEED - 15m/min.
7. THE DOOR BLADE IS MADE OF GALVANIZED STEEL WITH 1mm THICKNESS. GALVANIZING PROCESS - "SENDZIMIRVERZKINT 275g/m2", STEEL HEATED UP TO 460 C AND SENT THROUGH A ZINK BATH.

ITEM No	QTY.	UN	DRAWING No ARTICLE No	ITEM MASS	DESCRIPTION/PART	TYPE	SIZE/DIMENSION	MATERIAL
14	1	PC	41-03313	181,5	PILLAR			
13	24	PC		0	WASHER,plain	DIN 125	13/24x2,5	A4-70
12	12	PC		0	NUT,HG	DIN 934 A4	M12	A4-70
11	12	PC		0,1	SCREW,hex,SS	DIN 933	M12-55	A4-70
10	2	PC		5,2	CONSOLE	40006488		
9	1	PC		105,8	DRIVE UNIT	ELEKTROMAT FLOATING FOOT	SG85F SJ-40.12	
8	2	PC		3,3	PEDESTAL BEARING	30002930	40	
7	1	PC		6,2	TORQUE MOUNTING	30003962		
6	1	PC	41-03311	2,4	HAND CRANK & EXTENSION			
5	2	PC	41-03208	8,8	PANEL HOLDER	CHANNEL BAR		
4	1	PC		0	STORM HOOKS SET	1.1460		
3	1	PC		390	ROLLER GATE	1.1460-1	OPENING 3500x3210	
2	1	PC	41-03303	186,4	COVER ASSEMBLY			
1	1	PC	41-03310	267,1	COAMING ASSEMBLY			

MACGREGOR

MACGREGOR NORWAY AS
Bleivassvegen 105
5347 Agotnes, Norway
Phone +47 56 31 33 00

General Tolerance
ISO14.30 Grade Medium
NS14.32 Grade A

CUSTOMER: FINCANTIERI

PROJECT: NB 6255

According to international laws this drawing is the property of Cargotec. The drawing and contents cannot be made public, copied or otherwise used, without our approval.

41-03302-01.dwg

ITEM K2 - HANGAR BHD ROLLER GATE
INTERFACE & INSTALLATION
ARRANGEMENT

MASS	1175 kg
General Scale	1:15
APPROVED BY	-
CHECKED BY	
DRAWN BY	MAM
DATE	2016-02-16
SHEET	1(2)
REVISION	D

PROJECT No: 9.BGO-1502
DRAWING No: 41-03302

DRAWING PRODUCED IN INVENTOR